Quick Setup Guide

PN42B430P2D/ PN50B430P2D

STOP
Please do not return this unit
If you are having problems operating this TV,
Please call:
1-800-SAMSUNG (1-800-726-7864)
For Web support please visit
www.samsung.com/support

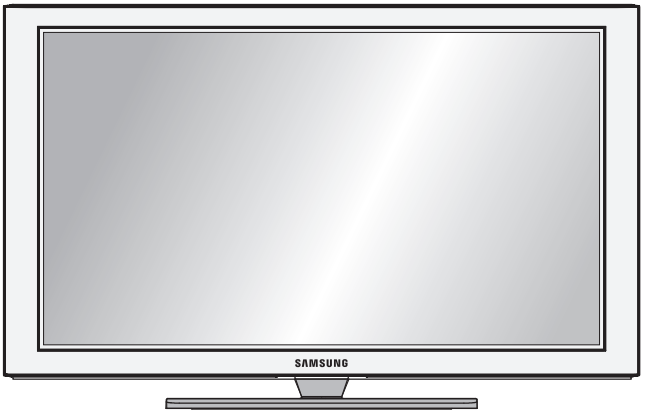

1-800-SAMSUNG (7267864)
Samsung Electronics America, Inc.
105 Challenger Road Ridgefield Park, NJ 07660-0511
Samsung Electronics Canada Inc., Customer Service
55 Standish Court Mississauga, Ontario L5R 4B2
Call center hours of operation (Mon-Sun 9AM-12AM EST).
www.samsung.com/register.

Rear & Side Panel Jacks

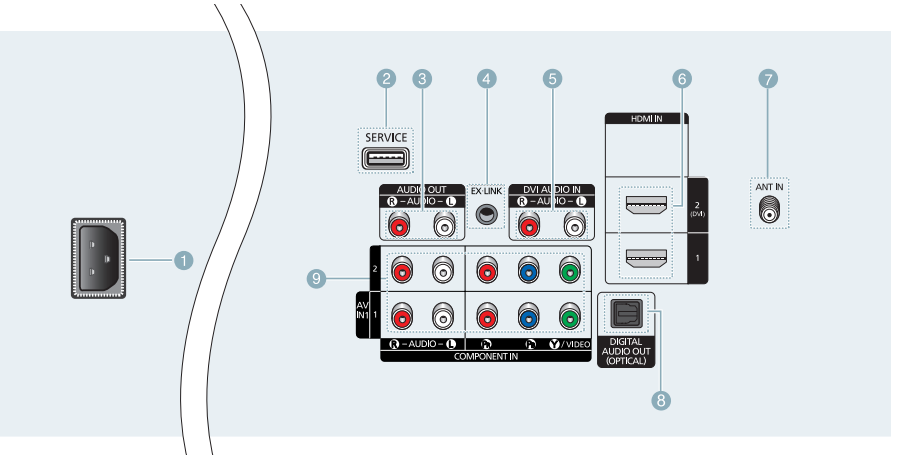

1. POWER IN
2. SERVICE
3. AUDIO OUT
4. EX-LINK
5. DVI AUDIO IN
6. HDMI IN 1, 2(DVI), 3
7. ANT IN
8. DIGITAL AUDIO OUT (OPTICAL)
9. COMPONENT IN 1, 2 / AV IN 1

Remote Control Buttons

You can use the remote control up to a distance of about 23 feet from the TV.

1. **POWER**
   Turns the TV on and off.
2. **NUMERIC BUTTONS**
   Press to change the channel.
3. **[−]**
   Press to select additional channels (digital and analog) being broadcast by the same station. For example, to select channel "54-3", press "54", then press "[−]" and "3".
4. **MUTE**
   Press to temporarily cut off the sound.
5. **[+] VOL [−]**
   Press to increase or decrease the volume.
6. **SOURCE**
   Press to display and select the available video sources.
7. **CH LIST**
   Used to display Channel Lists on the screen.
8. **TOOLS**
   Use to quickly select frequently used functions.
9. **UP▲ / DOWN▼ / LEFT◄ / RIGHT► / ENTER**
   Use to select on-screen menu items and change menu values.
10. **INFO**
    Press to display information on the TV screen.
11. **COLOR BUTTONS**
    Use these buttons in the Channel list.
12. **S.MODE**
    Press to select the sound mode.
13. **P.MODE**
    Press to select the picture mode.
14. Use these buttons in the DMA, Anynet+ modes. ([•]: This remote can be used to control recording on Samsung recorders with the Anynet+ feature)
15. **TV**
    Selects the TV mode directly.
16. **PRE-CH**
    Tunes to the previous channel.
17. **[^] CH [v]**
    Press to change channels.
18. **MENU**
    Displays the on-screen menu.
19. **FAV.CH**
    Press to switch to your favorite channels.
20. **RETURN**
    Returns to the previous menu.
21. **EXIT**
    Press to exit the menu.
22. **P.SIZE**
    Picture size selection.
23. **SRS**
    Selects SRS TruSurround HD mode.
24. **CC**
    Controls the caption decoder.
25. **MTS**
    Press to choose stereo, mono or Separate Audio Program (SAP broadcast).

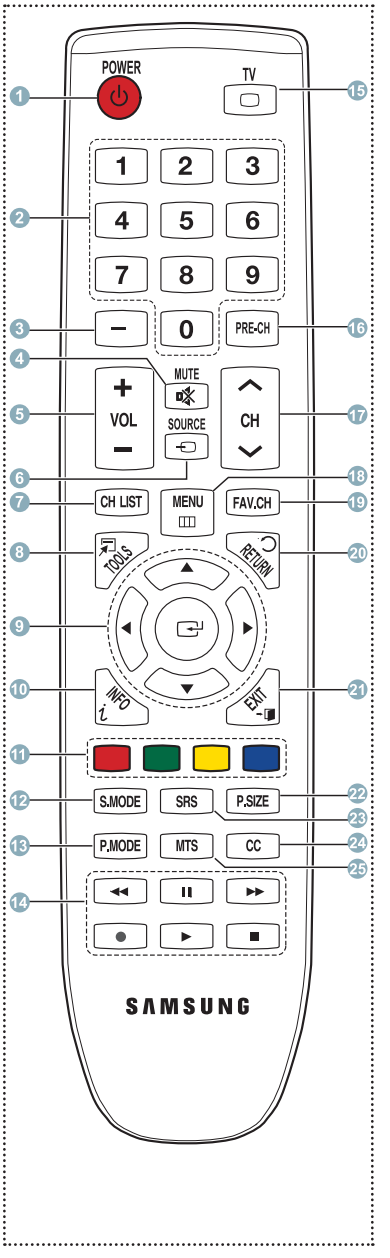

Video Input Performance Comparison

/	**HDMI/DVI**	Best
/	**PC/COMPONENT**	Better
	VIDEO	Normal

Audio Output Performance Comparison

	OPTICAL (Digital)	Best
	AUDIO (Analog)	Normal

Connecting a DVD / Blu-Ray or Cable Box / Satellite receiver (Set-Top Box) via HDMI

Using the HDMI (High Definition Multimedia Interface) Cable

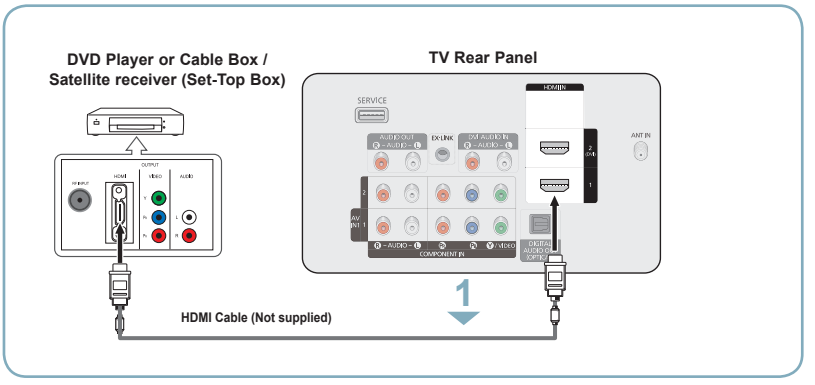

1. Connect an HDMI Cable between the HDMI IN (1, 2(DVI), or 3) jack on the TV and the HDMI jack on the DVD / Blu-Ray Player or Cable Box / Satellite receiver (Set-Top Box).
2. Press the **SOURCE** button on the remote control until you see the Set-Top Box signal (see “To Select the Source” on page 10).

What is HDMI?

- HDMI, or high-definition multimedia interface, is an interface that enables the transmission of digital audio and video signals using a single cable.
- The difference between HDMI and DVI is that the HDMI device is smaller in size and has the HDCP (High Bandwidth Digital Copy Protection) coding feature installed.

➢ Each DVD / Blu-Ray Player or Cable Box / Satellite receiver (Set-Top Box) has a different back panel configuration.

➢ The TV may not output sound and pictures may be displayed with abnormal color when DVD Player or Cable Box / Satellite receivers supporting HDMI versions older than 1.3 are connected. When connecting an older HDMI cable and there is no sound, connect the HDMI cable to the HDMI IN 2(DVI) jack and the audio cables to the DVI AUDIO IN [R-AUDIO-L] jacks on the back of the TV. If this happens, contact the company that provided the DVD Player or Cable Box / Satellite receiver to confirm the HDMI version, then request an upgrade.

➢ HDMI cables that are not 1.3 may cause annoying flicker or no screen display.

Connecting a DVD / Blu-Ray Player or Cable Box / Satellite receiver (Set-Top Box) via DVI

Using the DVI (Digital Visual Interface) Cable

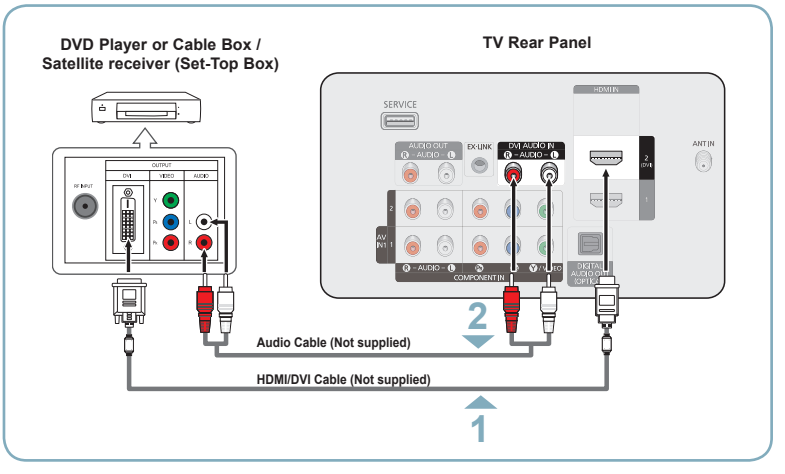

1. Connect a HDMI/DVI Cable or DVI-HDMI Adapter between the HDMI IN 2(DVI) jack on the TV and the DVI jack on the DVD / Blu-Ray Player or Cable Box/Satellite receiver (Set-Top Box).
2. Connect Audio Cables between the DVI AUDIO IN [R-AUDIO-L] jack on the TV and the DVD / Blu-Ray Player or Cable Box / Satellite receiver (Set-Top Box).
3. Press the **SOURCE** button on the remote control until you see the Set-Top Box signal (see “To Select the Source” on page 10).

➢ Each DVD / Blu-Ray Player or Cable Box / Satellite receiver (Set-Top Box) has a different back panel configuration.

➢ When connecting a DVD / Blu-Ray Player or Cable Box / Satellite receiver (Set-Top Box), match the color of the connection terminal to the cable.

➢ When using an HDMI / DVI cable connection, you must use the HDMI IN 2 jack.

Connecting a DVD / Blu-Ray Player or Cable Box / Satellite receiver (Set-Top Box) via Component cables

Using the Component Cable

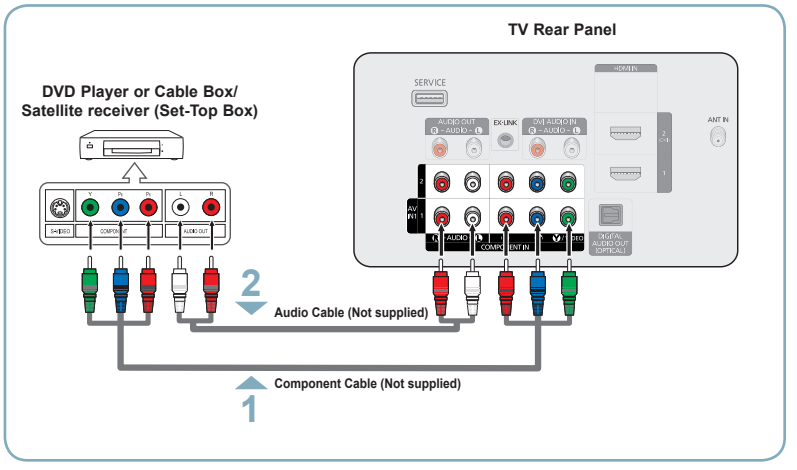

1. Connect a Component Cable between the COMPONENT IN (1 or 2) [Y, P_B, P_R] jacks on the TV and the COMPONENT [Y, P_B, P_R] jacks on the DVD / Blu-Ray Player or Cable Box / Satellite receiver(Set-Top Box).
2. Connect Audio Cables between the COMPONENT IN (1 or 2) [R-AUDIO-L] jacks on the TV and the AUDIO OUT jacks on the DVD / Blu-Ray Player or Cable Box / Satellite receiver (Set-Top Box).
3. Press the **SOURCE** button on the remote control until you see the Set-Top Box signal. (see “To Select the Source” on page 10).

- ➢ Component video separates the video into Y (Luminance (brightness), P_B (Blue) and P_R (Red) for enhanced video quality. Be sure to match the component video and audio connections. For example, if connecting a Component video cable to COMPONENT IN 1, connect the audio cable to COMPONENT IN 1 also.
- ➢ Each DVD / Blu-Ray Player or Cable Box / Satellite receiver (Set-Top Box) has a different back panel configuration.
- ➢ When connecting a DVD / Blu-Ray Player or Cable Box / Satellite receiver (Set-Top Box), match the color of the connection terminal to the cable.

Connecting a Camcorder

Using an HDMI Cable

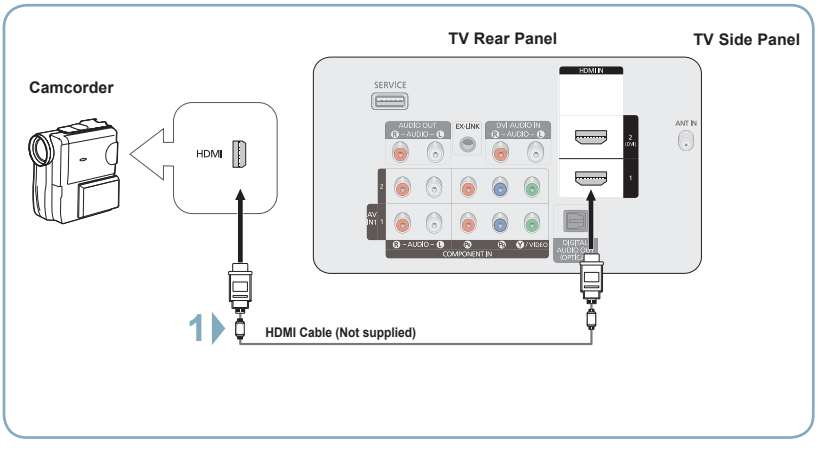

1. Connect an HDMI Cable between the HDMI IN (1, 2(DVI), or 3) jack on the TV and the HDMI jack on the camcorder.

- ➢ Each Camcorder has a different back panel configuration.

Connecting a VCR

Using a Video Cable

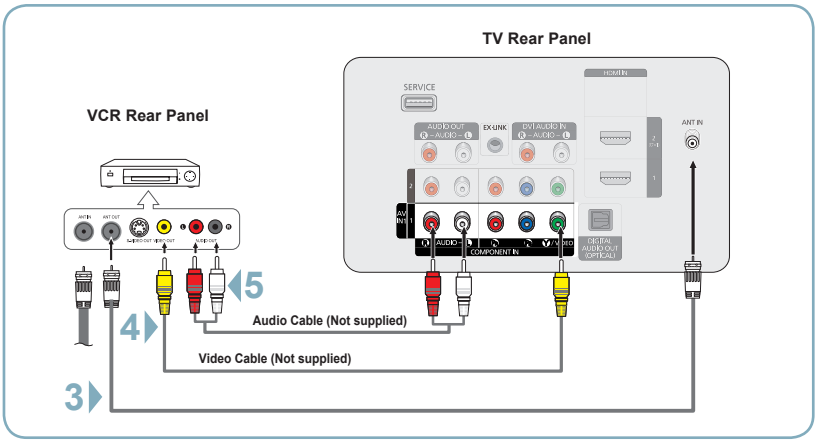

1. Unplug the cable or antenna from the back of the TV.
2. Connect the cable or antenna to the ANT IN terminal on the back of the VCR.
3. Connect an Antenna Cable between the ANT OUT terminal on the VCR and the ANT IN terminal on the TV.
4. Connect a Video Cable between the VIDEO OUT jack on the VCR and the AV IN 1 [Y/VIDEO] or AV IN 2 [VIDEO] jack on the TV.
5. Connect Audio Cables between the AUDIO OUT jacks on the VCR and the AV IN 1 (or AV IN 2) [R-AUDIO-L] jacks on the TV.
6. Press the **SOURCE** button on the remote control until you see the VCR signal (see “To Select the Source” on page 10).

- ➢ If you have a “mono” (non-stereo) VCR, use a Y-connector (not supplied) to connect to the right and left audio input jacks of the TV. Alternatively, connect the cable to the “R” jack. If your VCR is stereo, you must connect two cables.
- ➢ Each VCR has a different back panel configuration.
- ➢ When connecting a VCR, match the color of the connection terminal to the cable.
- ➢ When connecting to AV IN 1, the color of the AV IN 1 [Y/VIDEO] jack (Green) does not match the color of the video cable (Yellow).

Connecting a Digital Audio System

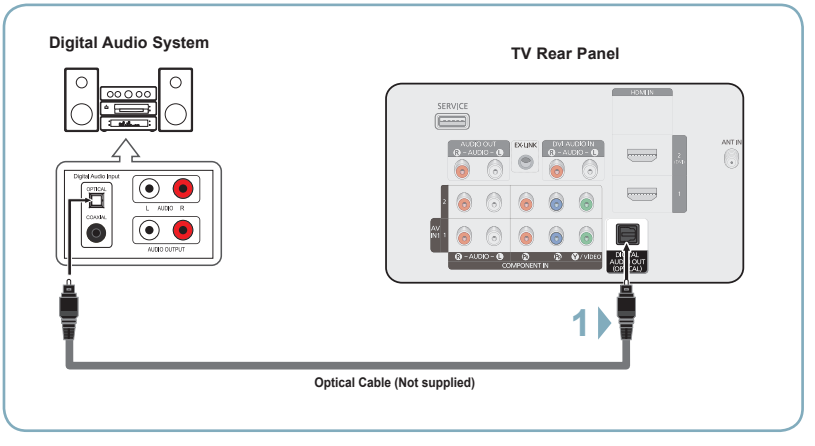

1. Connect an Optical Cable between the DIGITAL AUDIO OUT (OPTICAL) jack on the TV and the Digital Audio Input (OPTICAL) jacks on the Digital Audio System.
   When a Digital Audio System is connected to the DIGITAL AUDIO OUT (OPTICAL) jack: Decrease the volume of the TV, and adjust the volume level with the system’s volume control.

   What is OPTICAL?
   - An optical cable converts an electric signal into an optical light signal, and transmits it through glass fibers. S/PDIF is a transmission system of digital audio in the form of a light wave that uses a glass conductor.

- ➢ 5.1CH audio is possible when the TV is connected to an external device supporting 5.1CH.
- ➢ Each Digital Audio System has a different back panel configuration.
- ➢ When the receiver (home theater) is set to On, you can hear sound output from the TV’s Optical jack. When the TV is displaying a DTV(air) signal, the TV will send out 5.1 channel sound to the Home theater receiver. When the source is a digital component such as a DVD and is connected to the TV via HDMI, only 2 channel sound will be heard from the Home Theater receiver.
  If you want to hear 5.1 channel audio, connect the DIGITAL AUDIO OUT (OPTICAL) jack on the DVD player or Cable/Satellite Box directly to an Amplifier or Home Theater, not the TV.

Connecting an Analog Amplifier / DVD Home Theater

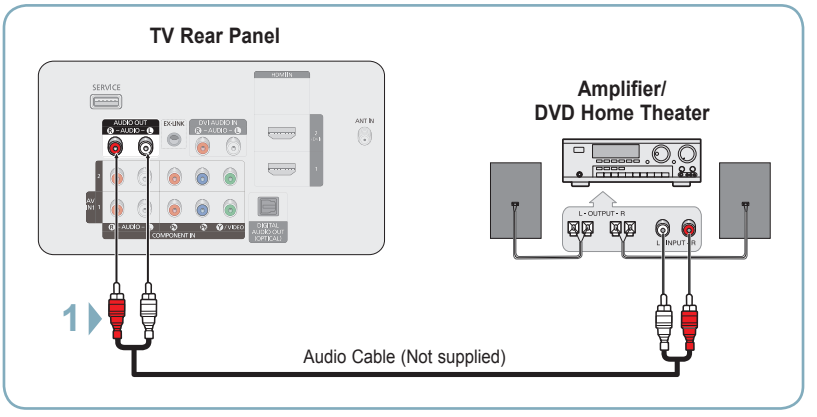

1 Connect Audio Cables between the AUDIO OUT [R-AUDIO-L] jacks on the TV and AUDIO IN [L-AUDIO-R] jacks on the Amplifier/DVD Home Theater.
When an audio amplifier is connected to the AUDIO OUT [R-AUDIO-L] jacks terminals: Decrease the volume of the TV, and adjust the volume level with the Amplifier's volume control.

- ➢ Each Amplifier / DVD Home Theater has a different back panel configuration.
- ➢ When connecting an Amplifier / DVD Home Theater, match the color of the connection terminal to the cable.

Connecting a PC

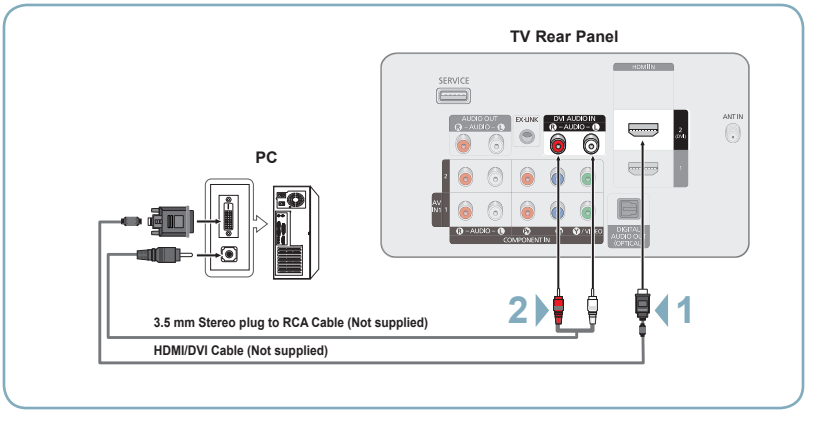

Using an HDMI/DVI Cable

1 Connect an HDMI/DVI cable between the HDMI IN 2(DVI) jack on the TV and the PC output jack on your computer.

2 Connect a 3.5 mm Stereo plug to 2RCA cable between the DVI AUDIO IN [R-AUDIO-L] jack on the TV and the Audio Out jack of the sound card on your computer.

- ➢ Each PC has a different back panel configuration.
- ➢ When connecting a PC, match the color of the connection terminal to the cable.
- ➢ When using an HDMI/DVI cable connection, you must use the HDMI IN 2(DVI) terminal.

Turning the TV On and Off

Press the **POWER** button on the remote control.
You can also use the **POWER** button on the TV.

➢ It may take a while for the picture to appear.

Viewing the Displays and Menus

Viewing the Display

1 Press the **INFO** button on the remote control.
The TV will display the channel, the type of sound, and the status of certain picture and sound settings.

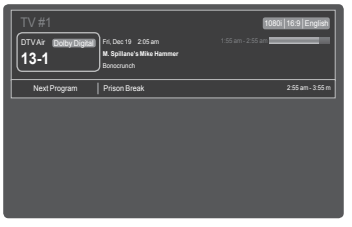

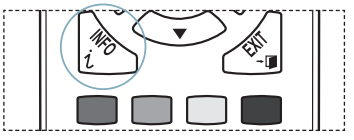

Viewing the Menus

1 With the power on, press the **MENU** button.
The main menu appears on the screen. The menu's left side has icons: **Picture, Sound, Channel, Setup, Input, Application**, **Support**.

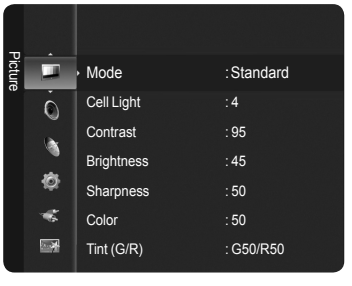

2 Press the ▲ or ▼ button to select one of the icons. Then press the **ENTER** button to access the icon's sub-menu.

3 Press the **EXIT** button to exit.

➢ It takes about one minute until the on-screen menu disappears.

Memorizing the Channels

Your TV can memorize and store all of the available channels for both air and cable channels. After the available channels are memorized, use the CH ⌃ or CH ⌄ button to scan through the channels. This eliminates the need to change channels by entering the channel digits. There are three steps for memorizing channels: selecting a broadcast source, memorizing the channels (automatic) and adding and deleting channels (Channel Lists).

Storing Channels in Memory (Automatic Method)

Before your television can begin memorizing the available channels, you must specify the type of signal source that is connected to the TV (i.e. an Air or a Cable system).

1 Press the **MENU** button to display the menu.
Press the ▲ or ▼ button to select **Channel**, then press the **ENTER** button.

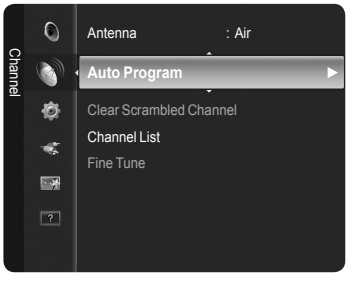

2 Press the ▲ or ▼ button to select **Auto Program**, then press the **ENTER** button.

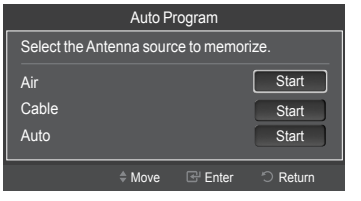

3 Press the ▲ or ▼ button to select an antenna connection, then press the **ENTER** button.

➢ Air: Air antenna signal.
Cable: Cable antenna signal.
Auto: Air and Cable antenna signals.

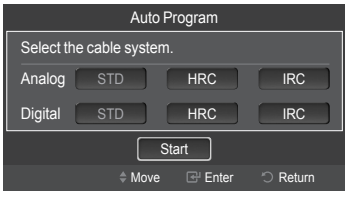

4 When selecting the Cable TV system:
Press the **ENTER** button to start the auto program.
Press the ◄ or ► to select the correct analog signal cable system source among **STD**, **HRC**, and **IRC**, then press the **ENTER** button. If you have Digital cable TV, select the cable system signal source for both Analog and Digital.

➢ **STD, HRC**, and **IRC** identify various types of cable TV systems. Contact your local cable company to identify the type of cable system that exists in your particular area. At this point the signal source has been selected.

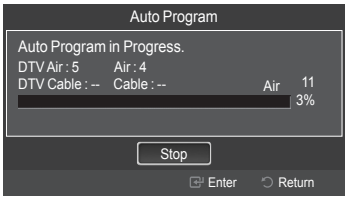

5 The TV begins memorizing all available stations.

➢ After all the available channels are stored, it starts to remove scrambled channels. The Auto program menu then reappears.

➢ If you want to stop Auto Programming, press the **ENTER** button. The **Stop Auto Program?** message will be displayed. Select **Yes** by pressing the ◄ or ► button, then press the **ENTER** button.

Press the **EXIT** button to exit.

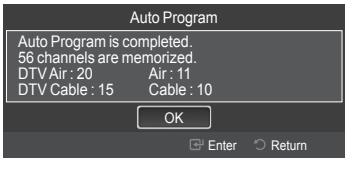

Changing the Picture Standard

You can select the type of picture which best corresponds to your viewing requirements.

1 Press the **MENU** button to display the menu.
Press the **ENTER** button to select **Picture**.

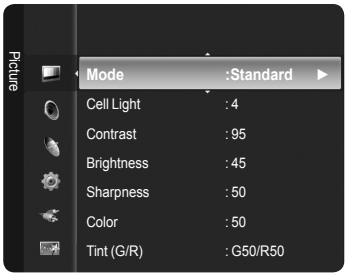

2 Press the **ENTER** button to select **Mode**.
Press the ▲ or ▼ button to select **Dynamic, Standard**, or **Movie**.
Press the **ENTER** button.

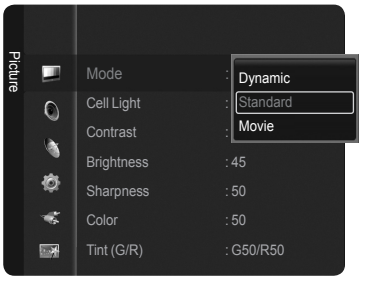

- **Dynamic**: Select a high-definition picture for bright environments.
- **Standard**: Selects the optimal picture display for normal environments. This setting is convenient for most situations.
- **Movie**: Selects a comfortable picture display for dark environments.

3 Press the **EXIT** button to exit.

Setting the Picture Size

Occasionally, you may want to change the size of the image on your screen. Your TV comes with six screen size options, each designed to work best with specific types of video input. Your satellite receiver may have its own set of screen sizes as well. In general, though, you should view the TV in 16:9 mode as much as possible

1 Press the **MENU** button to display the menu. Press the **ENTER** button to select **Picture**.

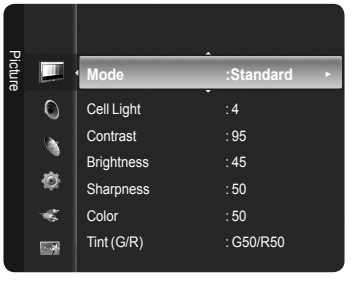

2 Press the ▲ or ▼ button to select Picture Option, then Press the ENTER button.

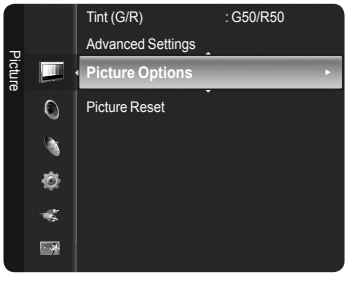

3 Press the ▲ or ▼ button to select **Size**, then Press the **ENTER** button.

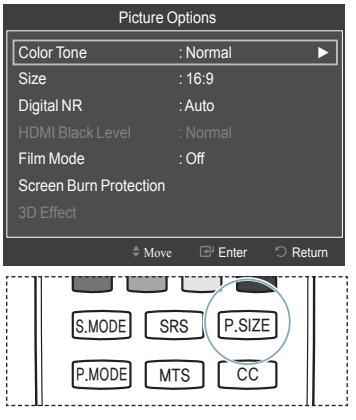

➢ Alternately, you can press the **P.SIZE** button on the remote control repeatedly to change the picture size.

- **16:9** : Sets the picture to the 16:9 aspect ratio.
- **Zoom1**: Stretches the 16:9 aspect ratio picture vertically.
- **Zoom2**: Stretches the **Zoom 1** picture vertically.
- **Wide Fit**: Stretches the picture both horizontally and vertically to display the optimal picture.
- **4:3**: Sets the picture to the 4:3 aspect ratio.
- **Screen Fit**: Displays the full native HD signal that cannot be viewed using a normal TV.

To Select the Source

Use to select TV or other external input sources such as DVD players or Cable Box/Satellite receivers (Set-Top Box) connected to the TV. Use to select the input source of your choice.

1 Press the **MENU** button to display the menu. Press the ▲ or ▼ button to select **Input**, then press the **ENTER** button.

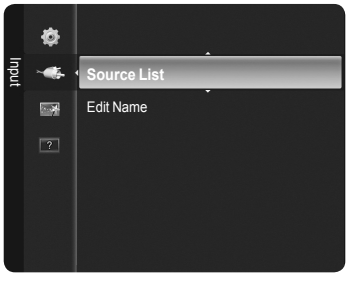

2 Press the **ENTER** button to select **Source List**. Press the ▲ or ▼ button to select the signal source, then press the **ENTER** button.

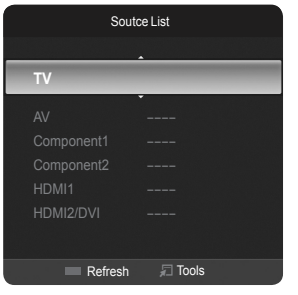

➢ Available signal sources: **TV, AV, Component1, Component2, HDMI1, HDMI2/DVI.**

➢ You can choose only those external devices that are connected to the TV. In the Source List, connected inputs will be highlighted and sorted to the top.
Inputs that are not connected will be sorted to the bottom.

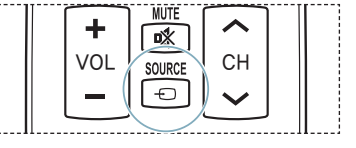

Troubleshooting

If the TV seems to have a problem, first try this list of possible problems and solutions.
If none of these troubleshooting tips apply, call your nearest Samsung service center.

Problem	Possible Solution
Poor picture quality.	Try another channel. Adjust the antenna. Check all wire connections.
Poor sound quality.	Try another channel. Adjust the antenna.
No picture or sound.	Try another channel. Press the **SOURCE** button. Make sure the TV is plugged in. Check the antenna connections. Make sure the **MUTE** button is off.
No sound or sound is too low at maximum volume.	First, check the volume of units connected to your TV (digital broadcasting receiver, DVD, cable broadcasting receiver, VCR, etc.). Then, adjust the TV volume accordingly.
Picture rolls vertically.	Check all connections.
The TV operates erratically.	Unplug the TV for 30 seconds, then try operating it again.
The TV won't turn on.	Make sure the wall outlet is working.
Remote control malfunctions	Replace the remote control batteries. Clean the upper edge of the remote control (transmission window). Check the battery terminals. Press the **TV** button to put your remote control in the TV mode. Make sure the remote has batteries. Check that the "+" and "-" ends of the batteries are inserted correctly.
Digital broadcasting screen problem.	Please check the digital signal strength and antenna input.
The image is too light or too dark.	Adjust the Brightness and Contrast. Adjust the Fine tuning.
The image is too large or too small.	Adjust the Size settings.
The visual qualities of digital channels vary.	The visual qualities of digital channels may vary depending on the original production method (analog or digital). - If the original production method is digital: High visual quality. - If the original production method is analog: The digital program displayed on the screen is originally an analog program which has been converted to digital. The visual quality is of an SD(Standard Definition) grade.
Screen is black and power indicator light blinks steadily.	On your computer; check the Power and Signal Cable. The TV is using its power management system. Move the computer's mouse or press any key on the keyboard.
	On your equipment check (STB, DVD, etc) ; Power and Signal Cable. The TV is using its power management system. Press the **Source** button on the panel or remote control. Turn the TV off and on.
Although the TV caption shows HD, the visual quality is not satisfactory.	The HD(High Definition) caption that appears when switching channels or when pressing the Information button on the remote control means the selected channel is a digital channel. If the broadcasting station converts an analog signal into digital and transmits the signal, the visual quality may not be perfect.
The distorted picture appears in the corner of the screen.	If **Screen Fit** is selected in some external devices, a distorted picture may appear in the corner of the screen. This symptom is caused by external devices, not the TV.
A strange sound is heard.	This is caused by minor systems operation and is not a defect.
Pixels are visible on the screen.	There may be few bright or dark pixels on the screen. These pixels will have no impact on the performance of the product.
The "Resets all settings to the default values" message appears.	This appears when you press and hold the **EXIT** button for a while. The product settings are reset to the factory defaults.

➢ This Plasma panel uses a panel consisting of sub pixels (2,359,296 pixels (for 42 inch models) / 3,147,264 pixels (for 50 inch models)) which require sophisticated technology to produce. However, there may be few bright or dark pixels on the screen. These pixels will have no impact on the performance of the product.

Contact SAMSUNG WORLD-WIDE
If you have any questions or comments relating to Samsung products, please contact the SAMSUNG customer care center.

Country	Customer Care Center ☎	Web Site	Address
CANADA	1-800-SAMSUNG (7267864)	www.samsung.com/ca	Samsung Electronics Canada Inc., Customer Service 55 Standish Court Mississauga, Ontario L5R 4B2 Canada
			Samsung Electronique Canada Inc., Service à la Clientèle 55 Standish Court Mississauga, Ontario L5R 4B2 Canada
U.S.A	1-800-SAMSUNG (7267864)	www.samsung.com	Samsung Electronics America, Inc. 105 Challenger Road Ridgefield Park, NJ 07660-0511

BN68-02027A-00