Galaxy 3000

10 - 30 kVA

Installation and user manual

THE UNINTERRUPTIBLE POWER PROVIDER

MGE
UPS SYSTEMS

Introduction

Thank you for selecting an MGE UPS SYSTEMS product to protect your electrical equipment.

The **Galaxy 3000** range has been designed with the utmost care. We recommend that you take the time to read this manual to take full advantage of the many features of your UPS.

MGE UPS SYSTEMS pays great attention to the environmental impact of its products. Measures that have made **Galaxy 3000** a reference in environmental protection include:

- the eco-design approach used in product development,
- the elimination of harmonic disturbances reinjected into the AC source,
- production in an ISO 14001 certified factory,
- recycling of **Galaxy 3000** at the end of its service life.

To discover the entire range of MGE UPS SYSTEMS products and the options available for the **Galaxy 3000** range, we invite you to visit our web site: **www.mgeups.com** or contact your MGE UPS SYSTEMS representative.

All products in the **Galaxy 3000** range are protected by patents. They implement original technology not available to competitors of MGE UPS SYSTEMS.

To take into account evolving standards and technology, equipment may be modified without notice. Indications concerning technical characteristics and dimensions are not binding unless confirmed by MGE UPS SYSTEMS.

This document may be copied only with the written consent of MGE UPS SYSTEMS. Authorised copies must be marked "**Galaxy 3000** Installation and User Manual n° 5103037500".

Safety rules

Safety of persons

The UPS must be installed in a room with restricted access (qualified personnel only, according to standard EN50091-1-2). A UPS has its own internal power source (the battery). Consequently, the power outlets may be energised even if the UPS is disconnected from the AC-power source.

Dangerous voltage levels are present within the UPS. It should be opened exclusively by qualified service personnel.

The UPS must be properly earthed.

The battery supplied with the UPS contains small amounts of toxic materials. To avoid accidents, the directives listed below must be observed.

- **Never operate the UPS if the ambient temperature and relative humidity are higher than the levels specified in the documentation.**
- **Never burn the battery (risk of explosion).**
- **Do not attempt to open the battery (the electrolyte is dangerous for the eyes and skin).**
- **Comply with all applicable regulations for the disposal of the battery.**
- **Avoid contact with the cooling liquid (eyes and skin). If contact occurs, rinse well with water.**

Product safety

A protection circuit breaker must be installed upstream and be easily accessible.

- Never install the UPS near liquids or in an excessively damp environment.
- Never let a liquid or foreign body penetrate inside the UPS.
- Never block the ventilation grates of the UPS.
- Never expose the UPS to direct sunlight or a source of heat.

Special precautions

- The UPS connection instructions contained in this manual must be followed in the indicated order.
- Check that the indications on the rating plate correspond to your AC-power system and to the actual electrical consumption of all the equipment to be connected to the UPS.
- If the UPS must be stored prior to installation, storage must be in a dry place.
- The admissible storage temperature range is -10° C to +45° C.
- If the UPS remains de-energised for a long period, we recommend that you energise the UPS for a period of 24 hours, at least once every month. This charges the battery, thus avoiding possible irreversible damage.
- The UPS is designed for normal climatic and environmental operating conditions as defined in the "appendices" chapter: altitude, ambient operating temperature, relative humidity and ambient transport and storage conditions.
- Using the UPS within the given limits guarantees its operation, but may affect the service life of certain components, particularly that of the battery and its autonomy. The maximum storage time of the UPS is limited due to the need to recharge its integrated battery.
- Unusual operating conditions may justify special design or protection measures:

- harmful smoke, dust, abrasive dust,
- humidity, vapor, salt air, bad weather or dripping,
- explosive dust and gas mixture,
- extreme temperature variations,
- bad ventilation,
- conductive or radiant heat from other sources,
- cooling water containing acid or impurities which may cause scale, silt, the electrolysis or corrosion of converter parts exposed to the water,
- strong electromagnetic fields,
- radioactive levels higher than those of the natural environment,
- fungus, insects, vermin, etc.,
- battery operating conditions.

The UPS must always be installed in compliance with:

- **the requirements of HD 384.4.42 S1/A2 - Chapter 42: Protection from thermal effects.**
- **standard IEC 60364-4-482 - Chapter 482: Fire protection.**

Foreword

Using this document

Information may be found primarily by consulting:
- the contents,
- the index.

Pictograms

Document

Important instructions that must always be followed

Information, advice, help

LED OFF

LED ON

LED flashing

Earth cables

Other cables

Vertical selection

Other selection

Enter / Confirm

Details

Circular menu

Graphical display

Graphical display

Graphical display

88.8
8.88
Digital display

E
S
C
Return to previous display

D
E
L
Delete

Access to measurements

Access to mimic diagrams

Contents

1. Presentation

1.1 Galaxy 3000 ... 7
UPS cubicle (dimensions and weights) ... 7
External battery cabinet / auxiliary cabinet (dimensions and weights) ... 7
1.2 Access to connections ... 8
1.3 Connection section ... 9
Version with common Normal and Bypass AC inputs ... 9
Version with external battery ... 10
Version with separate Normal and Bypass AC inputs ... 10
1.4 Man-machine interface ... 11
1.5 Relay communications card ... 11

2. Installation

2.1 Location ... 12
2.2 Layout of additional cabinets ... 12
2.3 Required protective devices and cable cross-sections ... 13
Recommended upstream protection ... 13
Recommended downstream protection ... 13
Required cable cross-sections ... 13
2.4 Installation depending on the system earthing arrangement (SEA) ... 14
Single UPS unit with common Normal and Bypass AC inputs ... 14
Single UPS unit with separate Normal and Bypass AC inputs ... 15
Single UPS unit with separate Normal and Bypass AC inputs, supplied by separate sources ... 16
Frequency converter (without Bypass AC input) ... 17
Parallel configuration without external bypass cubicle and with common Normal and Bypass AC inputs (maximum two units in parallel) ... 17
Parallel configuration without external bypass cubicle and with separate Normal and Bypass AC inputs (maximum two units in parallel) ... 18
Parallel configuration with external bypass cubicle and with common Normal and Bypass AC inputs (maximum four units in parallel) ... 18
Parallel configuration with external bypass cubicle and with separate Normal and Bypass AC inputs (maximum four units in parallel) ... 19
2.5 Connection of power cables in a single UPS unit ... 20
2.6 Connection of power cables for parallel UPS units ... 21
Redundant parallel configuration (maximum two UPS units) ... 21
Parallel configuration for increased capacity (maximum four UPS units) ... 22
Earth interconnection between UPS units connected in parallel ... 24
2.7 Auxiliary interconnections between UPS units in parallel configurations ... 25
Redundant parallel configuration (maximum two UPS units) ... 25
Parallel configuration for increased capacity (maximum four UPS units) ... 25
Fitting the protection cover for the auxiliary interconnection cables ... 26
2.8 Connection of the emergency power off terminal block ... 27
2.9 Connection of the relay communications card ... 27
2.10 Securing the control/communications cables ... 28
Single UPS unit ... 28
Parallel UPS units ... 29
2.11 Power connections for an external battery cabinet ... 30
2.12 Assembly and connection of an empty battery cabinet ... 30
Mounting the battery circuit breaker kit ... 30
Mounting the shelves and the battery cells ... 31
2.13 Control connections for an external battery cabinet ... 32
2.14 Connection of an input isolating transformer ... 33
2.15 Connection of an output isolating transformer ... 33

Contents

3. Final checks

3.1 Check on the position of the stop on the manual bypass switch 34

4. Operation

4.1 Shutting down a single UPS 35

4.2 Restarting single UPS 35

4.3 Shutting down a parallel configuration 36

4.4 Restarting a parallel configuration 36

4.5 Operating modes 37

Normal (double conversion) mode 37

ECO mode (single UPS only) 37

4.6 Operation on battery power 38

Transfer to battery power 38

Low battery warning 38

End of battery power 38

4.7 Return of Normal AC source 38

4.8 Restart on battery power 38

4.9 UPS personalisation 39

Access to the personalisation functions 39

Operating mode 39

Frequency 39

Automatic bypass 39

Battery 39

Transformers 40

4.10 Relay contacts (communications card) 40

4.11 Display functions 41

5 Maintenance

5.1 Identification of alarms 42

5.2 Life Cycle Monitoring (LCM) 42

5.3 UPS isolation 43

Single UPS 43

Frequency converter 43

UPS operating in ECO mode 43

Parallel configuration without external bypass cubicle 44

Parallel configuration with external bypass cubicle 45

5.4 Return to the Normal position 46

Single UPS 46

Frequency converter 47

Parallel configuration without external bypass cubicle 47

Parallel configuration with external bypass cubicle 48

5.5 Training Center 49

6 Environment 50

7 Appendices

7.1 Technical sheets 51

Electrical characteristics 51

Thermal characteristics 54

7.2 Glossary 54

7.3 Index 55

1.1 Galaxy 3000

UPS cabinet

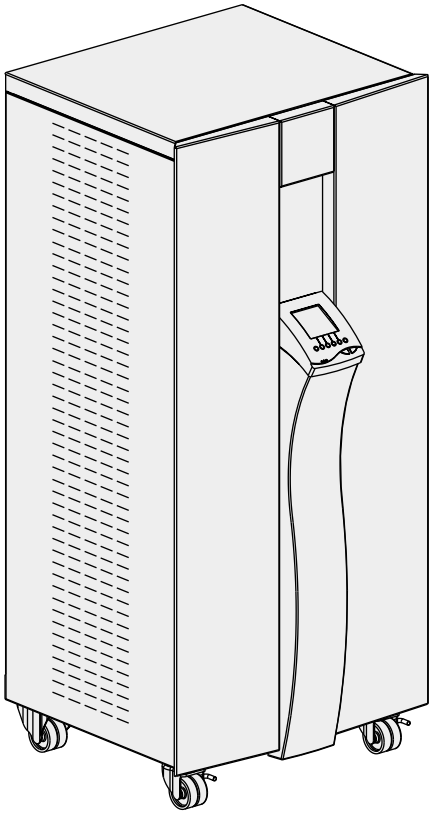

Dimensions

UPS power rating (kVA)	Dimensions in mm (H x W x D)
10/15	1420 x 610 x 565
20/30	1600 x 640 x 685

Weight in kg
(UPS with built-in batteries)

Backup time (5-year batteries)	UPS power rating (kVA)			
	10	**15**	**20**	**30**
0 min	210	210	240	240
10 min	330	384	472	572
15 min	384		572	

Backup time (10-year batteries)	UPS power rating (kVA)			
	10	**15**	**20**	**30**
7 min		381		572
12 min	381		572	

External battery cabinet / auxiliary cabinet

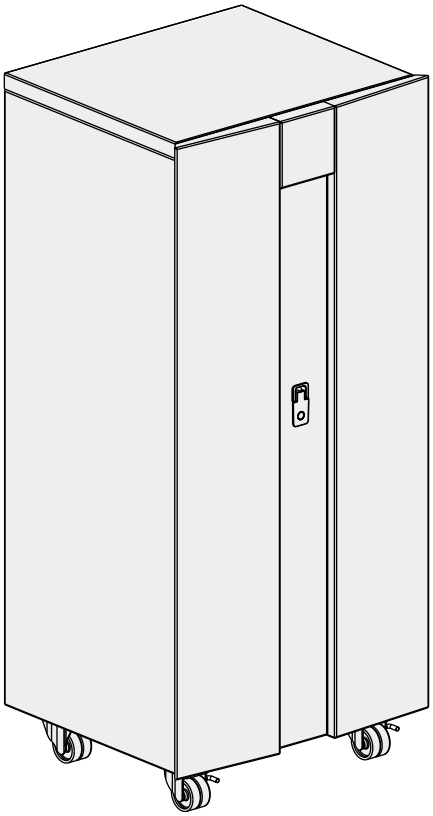

Dimensions (H x W x D) in mm

1600 x 850 x 685

Weight in kg (cabinet alone)

Backup time (5-year batteries)	UPS power rating (kVA)			
	10	**15**	**20**	**30**
0 min	160	160	160	160
15 min		395		682
30 min	395	440	682	840
60 min	557	2x440	2x576	2x765

Backup time (10-year batteries)	UPS power rating (kVA)			
	10	**15**	**20**	**30**
15 min	300	449	504	661
30 min	449	569	752	2x600
60 min	2x389	2x569	2x624	3x660

1. Presentation

1.2 Access to connections

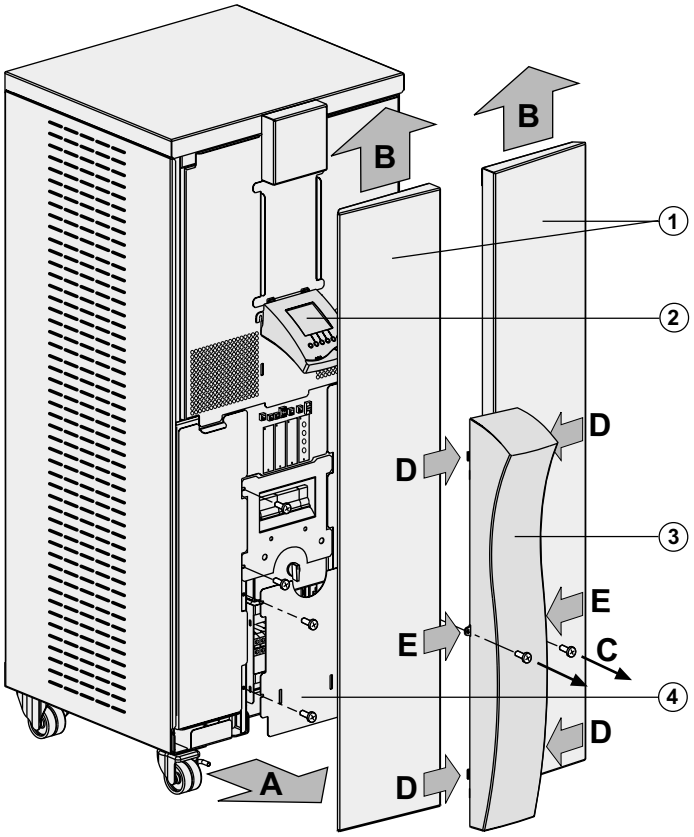

1 Cover panels
2 Man-machine interface
3 Central wave-shaped cover
4 Terminal block cover

A: pull the bottom of each panel (1) out and away from the UPS.
B: lift the panel to free the top part.
C: remove the 2 screws used to secure the wave-shaped cover (3) during transport.
D: unclip the bottom and then the top of the wave-shaped cover (3).
E: break the 2 transport tabs.

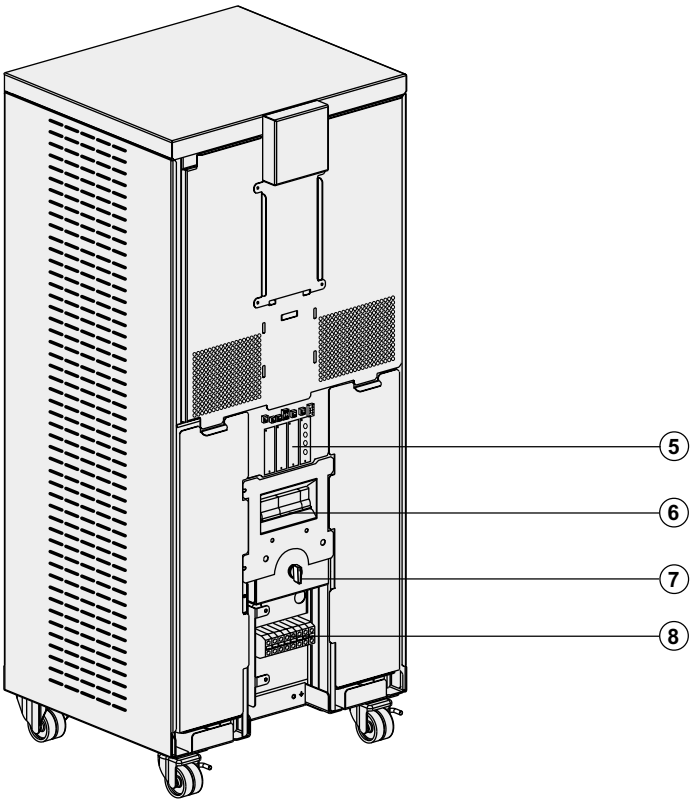

5 Communications rack
6 AC input switch and battery circuit breaker
7 Manual bypass switch
8 Terminal blocks

1.3 Connection section

Version with common Normal and Bypass AC inputs

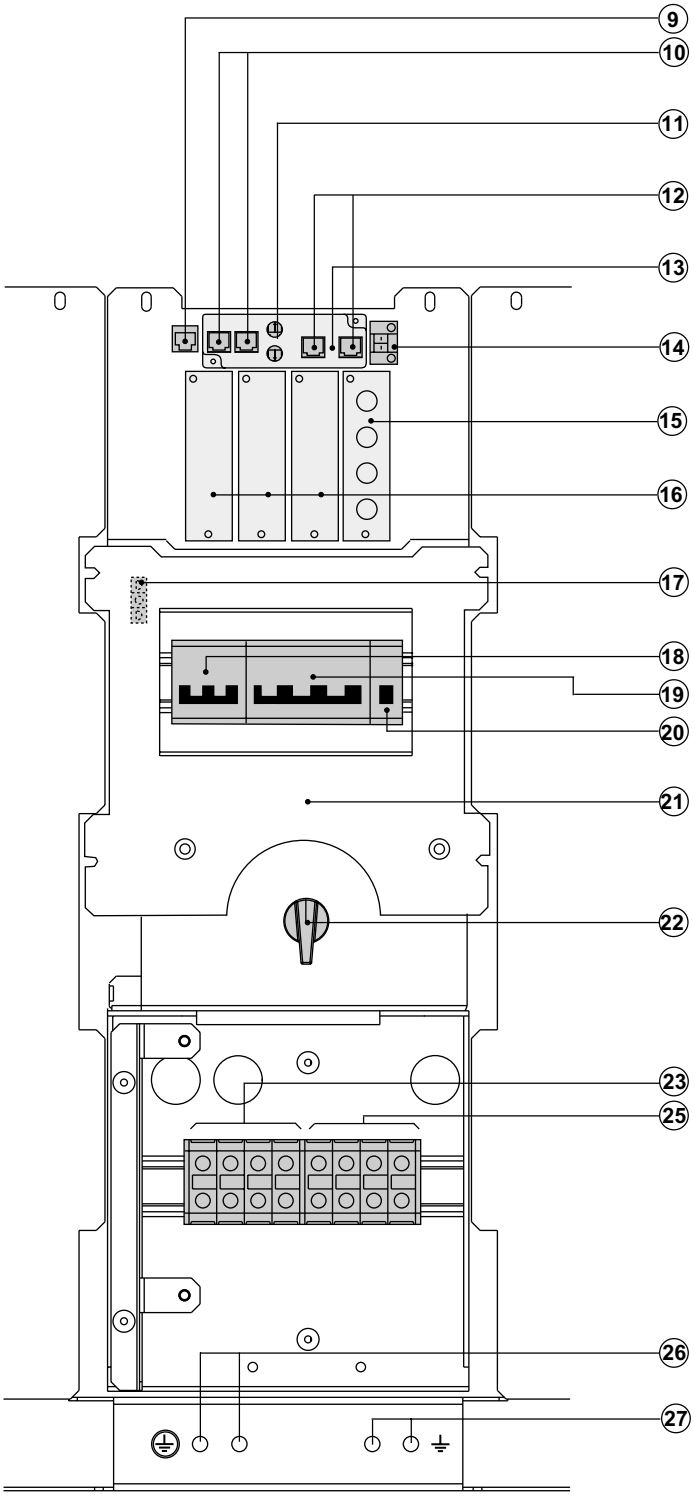

9 RJ45 connector for external synchronisation

10 RJ12 connectors for exchange currents between UPS units (parallel configurations)

11 External bypass connector: switch positions (parallel configurations)

12 RJ45 connectors for data exchange between UPS units (parallel configurations)

13 Light indicating CAN communication between units (parallel configurations)

14 Screw terminal block for emergency power off (EPO) connection

15 Slot for relay communications card

16 Free slots for optional communications cards

17 Terminal block for battery circuit breaker control wiring

18 Q1: Normal AC input switch

19 QF1: Battery circuit breaker

20 QD1: Circuit breaker reserved for after-sales support

21 Circuit breaker cover

22 Manual bypass switch

23 Normal AC source input terminal block

25 Output terminal block

26 Main earthing connector

27 Secondary earthing connector (auxiliary cabinets)

1. Presentation

Version with external battery

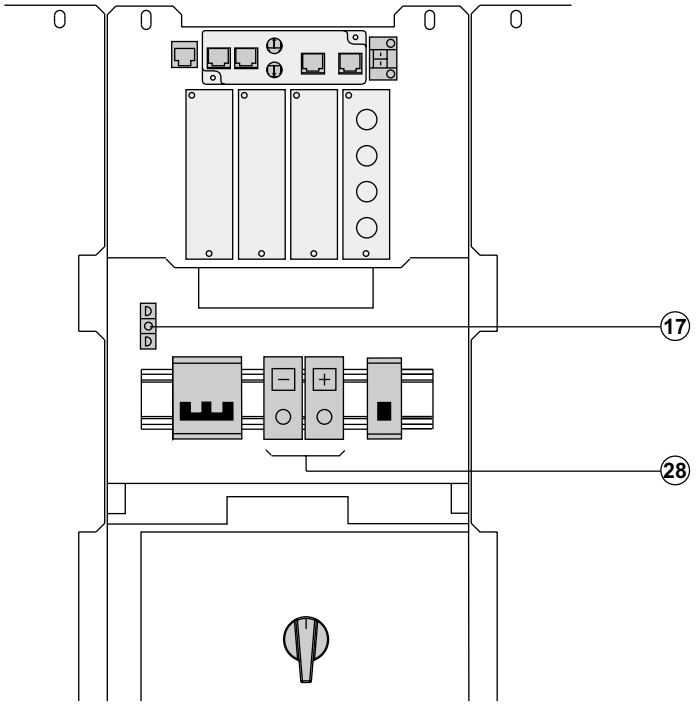

17 Terminal block for battery circuit breaker control wiring

28 Terminal block for external battery cabinets

Version with separate Normal and Bypass AC inputs

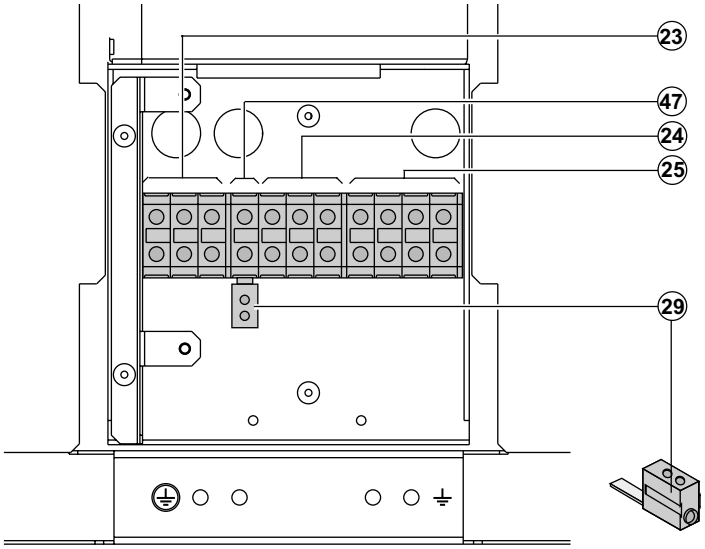

23 Normal AC source input terminal block

47 Common neutral terminal for AC systems

24 Bypass AC source input terminal block

25 Output terminal block

29 Accessory terminal for connection of a second neutral conductor

1.4 Man-machine interface

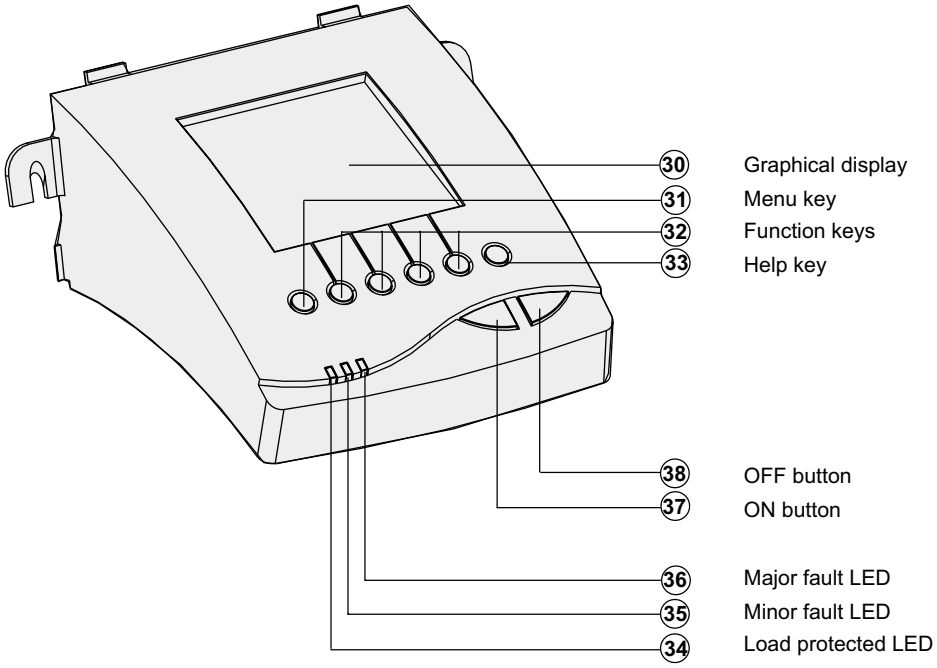

1.5 Relay communications card

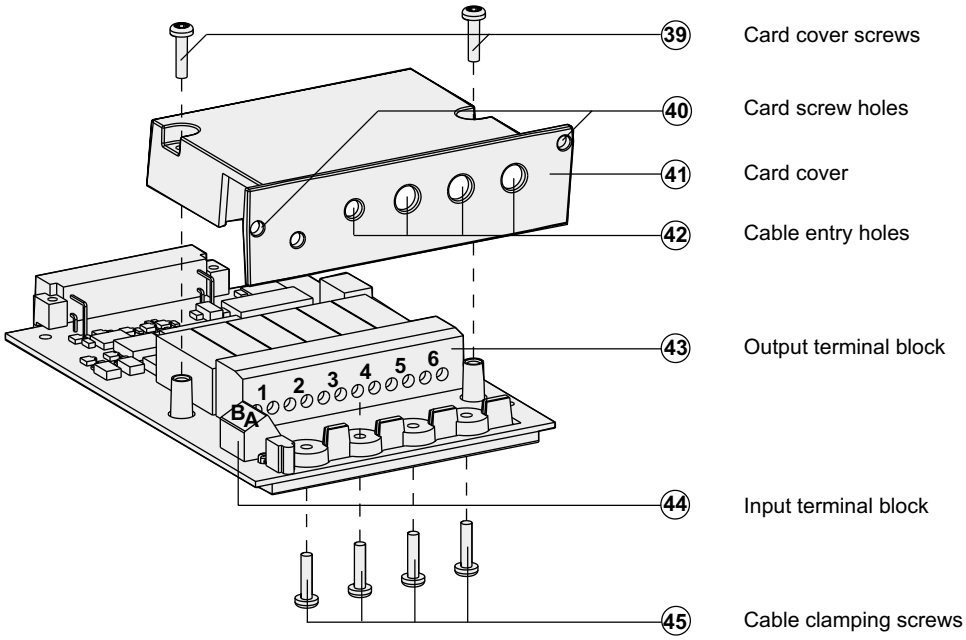

2. Installation

2.1 Location

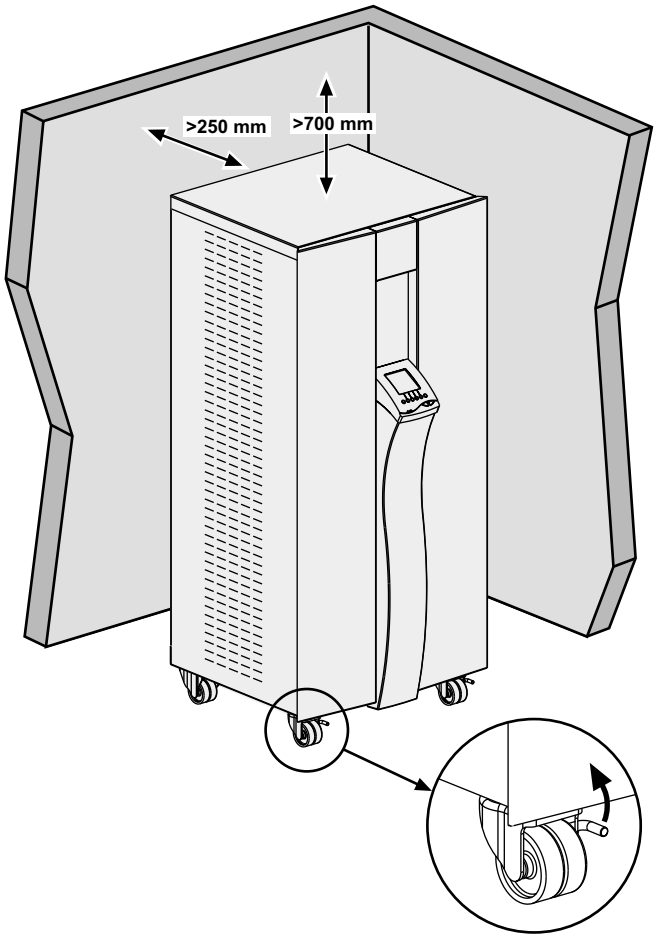

1 - Position the UPS.
2 - Lift the lever until the front casters are blocked.
3 – Remove the 2 lateral front panels.
4 - Remove the 2 battery protection side panels located at the back.
5 - Remove the foam protection strips.
6 - Remove the cardboard caps placed on the battery elements.
7 – Cut and remove the strapping placed around the battery elements.

To ensure that maintenance can be carried out easily and quickly, leave nothing on top of the UPS.

Abnormal temperature rise may occur if the indicated clearances are not observed. Maintenance operations may also be more difficult.

The UPS must be installed in a room with restricted access (qualified personnel only).

2.2 Layout of additional cabinets

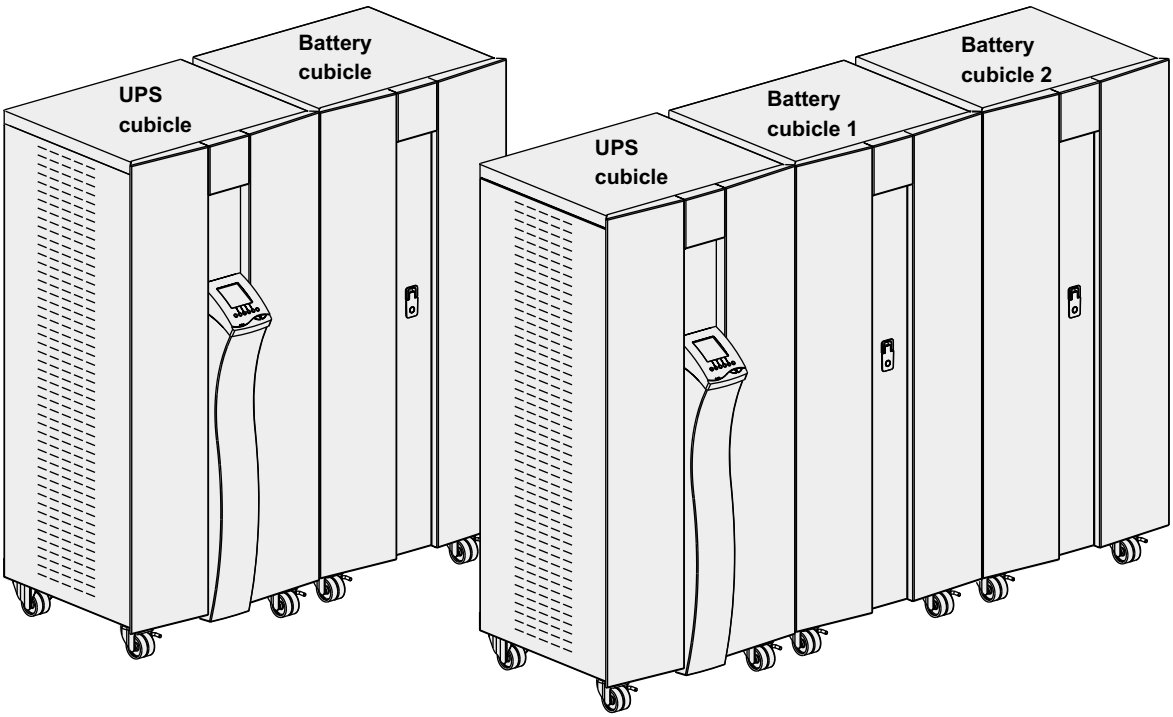

2.3 Required protective devices and cable cross-sections

Recommended upstream protection

UPS power rating	Upstream circuit-breaker
10 - 15 kVA	C60H-C-40A
20 - 30 kVA	NC100H-D-80A

Curve H for the upstream circuit breaker may be replaced by curve N or L, depending on the installation.

Note. See the simplified diagrams in the appendix for common or separate AC inputs, indicating the positions of the protection devices, the characteristics of the internal UPS fuses and UPS line currents under overload conditions.

Recommended downstream protection

UPS power rating	Disjoncteur aval	Fusible URGB ou URC
10 - 15 kVA	C60L-Z-10A	≤ 12A
	C60L-C-4A	
20 kVA	C60L-Z-10A	≤ 14A
	C60L-C-6A	
30 kVA	C60L-Z-16A	≤ 16A
	C60L-C-10A	

Curve L for the downstream circuit breaker may be replaced by curve N or H, depending on the installation.
The indicated protection ensures discrimination for each output circuit downstream of the UPS, whether supplied by via the Normal or the Bypass AC source. If these recommendations are not followed, a short-circuit on an output circuit can result in a break in power longer than 20 milliseconds on all the other output circuits.

Note. See the simplified diagrams in the appendix for common or separate AC inputs, indicating the positions of the protection devices, the characteristics of the internal UPS fuses and UPS line currents under overload conditions.

Required cable cross-sections

UPS power rating	Copper cable cross-sections	
	Normal AC source, Bypass AC source and Load circuits (<100m)	Battery circuits (<15m)
10 kVA	6 mm^2	10 mm^2
15 kVA	10 mm^2	16 mm^2
20 kVA	16 mm^2	25 mm^2
30 kVA	25 mm^2	35 mm^2

Terminal-block cable capacity:
16 to 35 mm^2.
Capacity for earthing conductor: 6 mm^2.

2. Installation

2.4 Installation depending on the system earthing arrangement (SEA)

Reference diagrams for single and parallel UPS configurations.

Single UPS unit with common Normal and Bypass AC inputs

Upstream and downstream: TT, TN and IT systems with neutral distributed

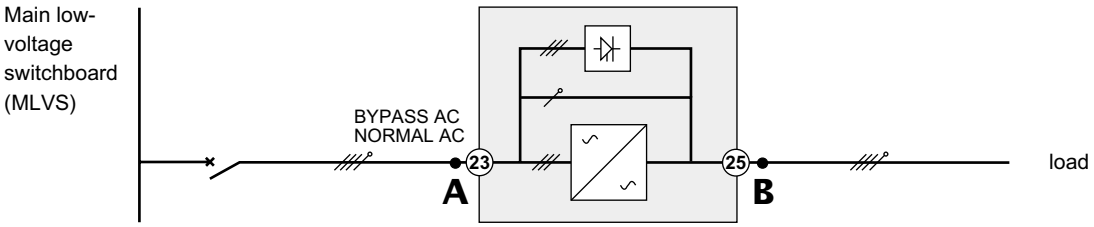

Change in SEA between upstream and downstream or galvanic isolation required

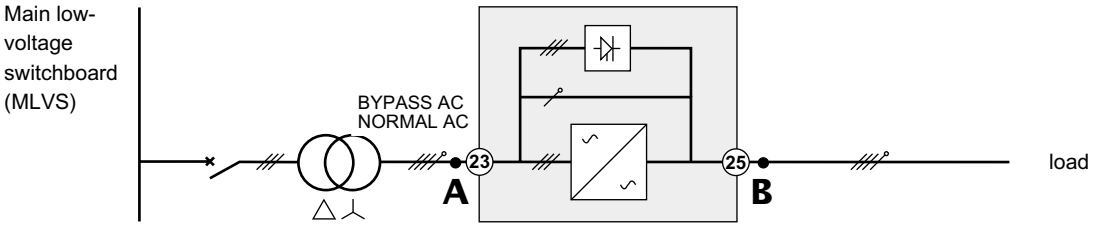

or

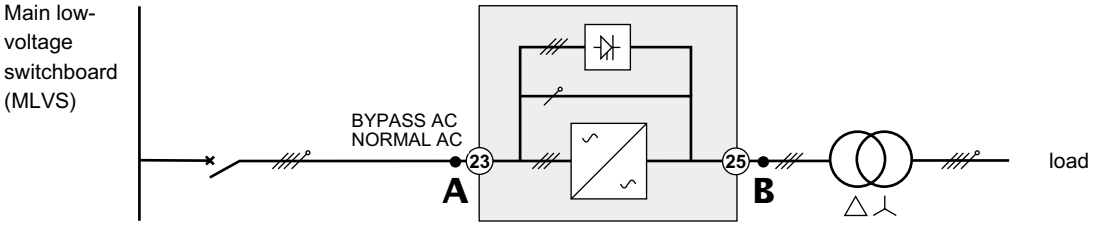

Upstream and downstream: Neutral not distributed

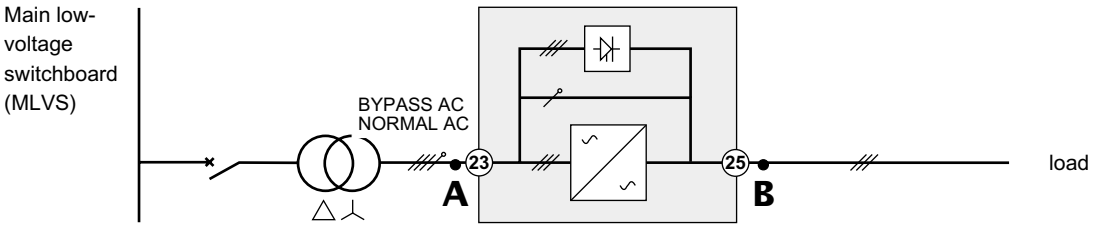

Single UPS unit with separate Normal and Bypass AC inputs

Upstream: TT, TN or IT system with neutral distributed on both inputs
Downstream: TT, TN or IT system with neutral distributed

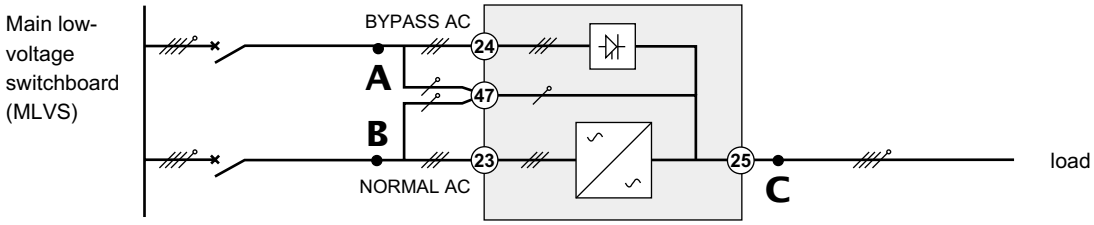

Upstream: TT, TN or IT system with neutral distributed on Bypass AC input only
Downstream: TT, TN or IT system with neutral distributed

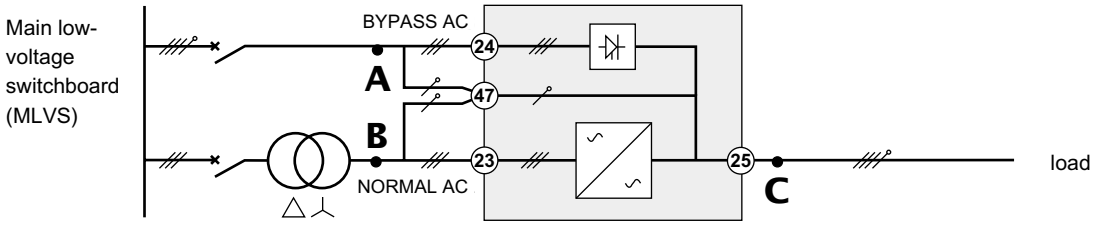

Change in SEA between upstream and downstream or galvanic isolation required

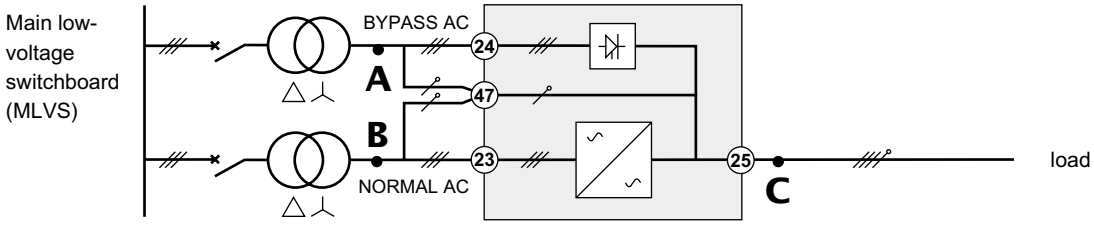

or

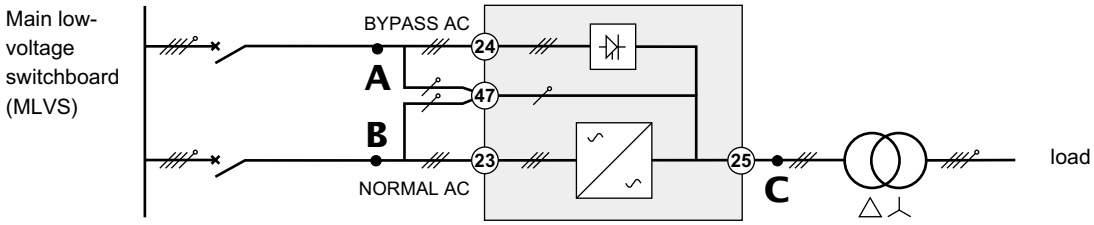

Upstream and downstream: Neutral not distributed

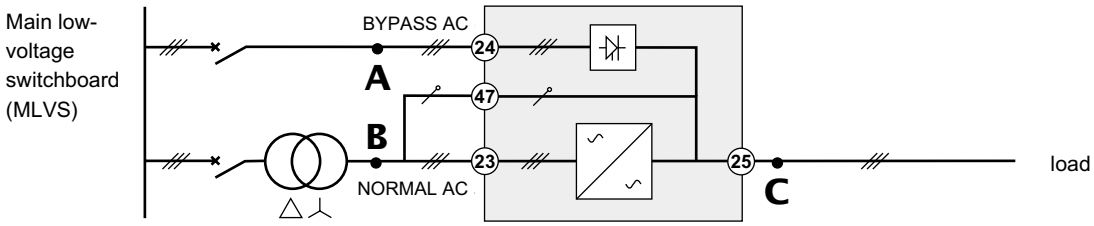

2. Installation

Single UPS unit with separate Normal and Bypass AC inputs, supplied by separate sources

Upstream: TT, TN or IT system with neutral distributed on one of the inputs
Downstream: TT, TN or IT system with neutral distributed

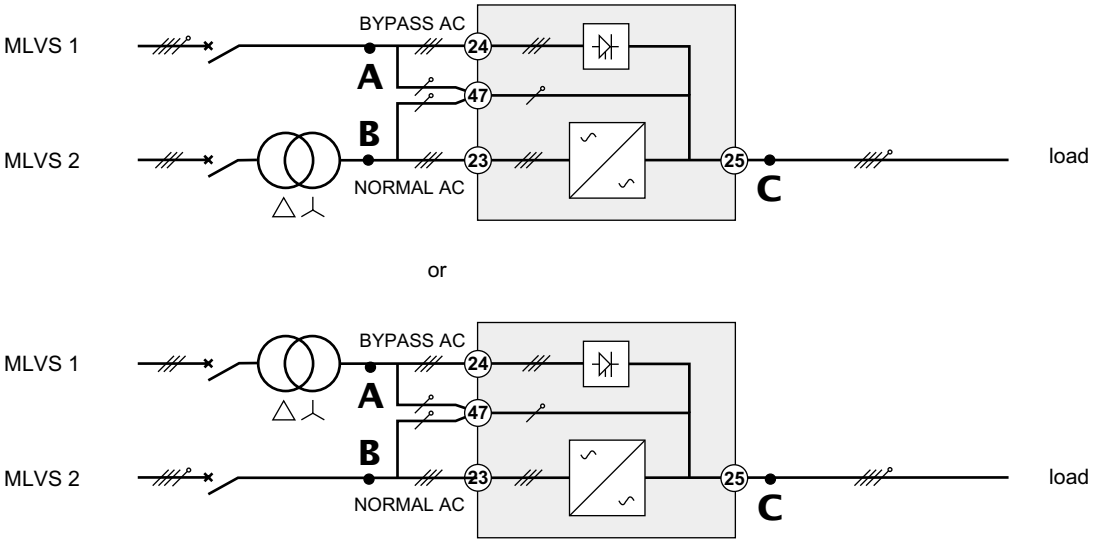

or

Change in SEA between upstream and downstream or galvanic isolation required

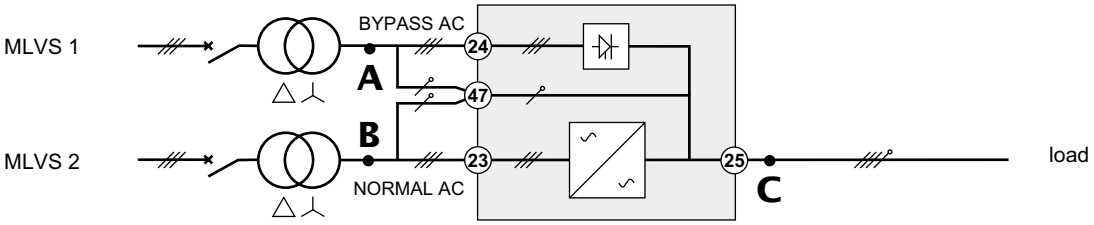

Upstream and downstream: Neutral not distributed

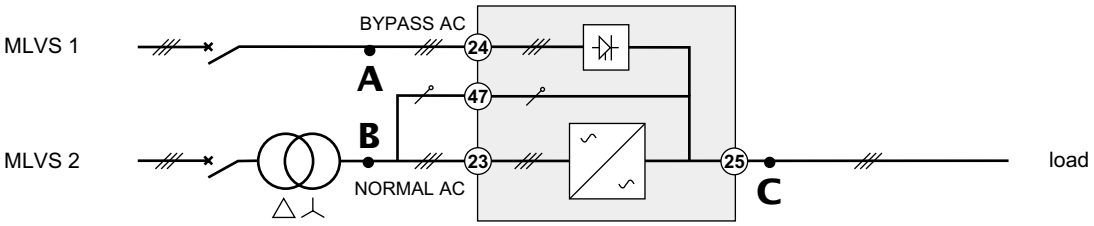

Frequency converter (without Bypass AC input)

Upstream and downstream: TT, TN or IT system with neutral distributed

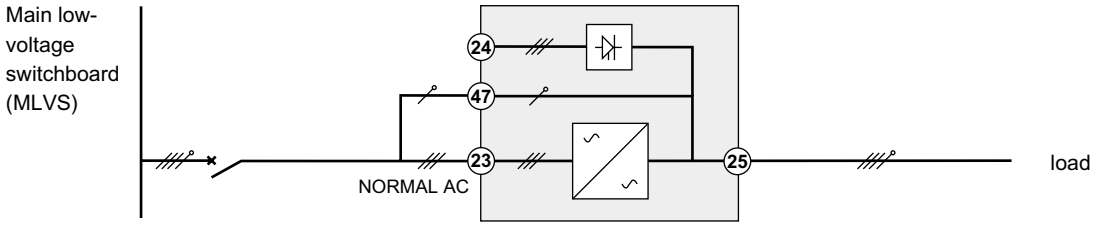

Upstream and downstream: Neutral not distributed

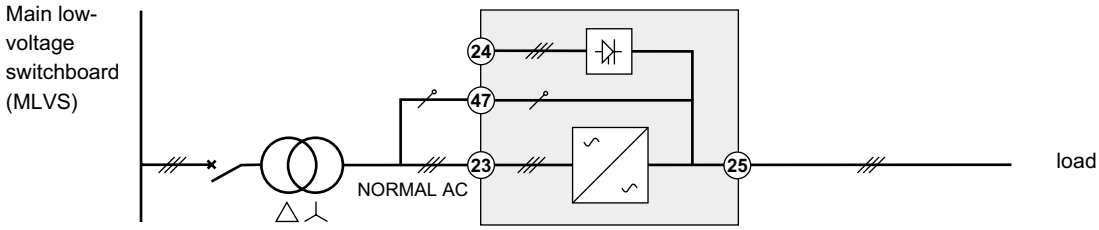

Parallel configuration without external bypass cubicle and with common Normal and Bypass AC inputs (maximum two units in parallel)

The requirements for the different system earthing arrangements (SEA) are similar to those for single UPS configurations. In the diagrams on page 14, simply replace the single UPS units between points A and B by the following parallel configuration.

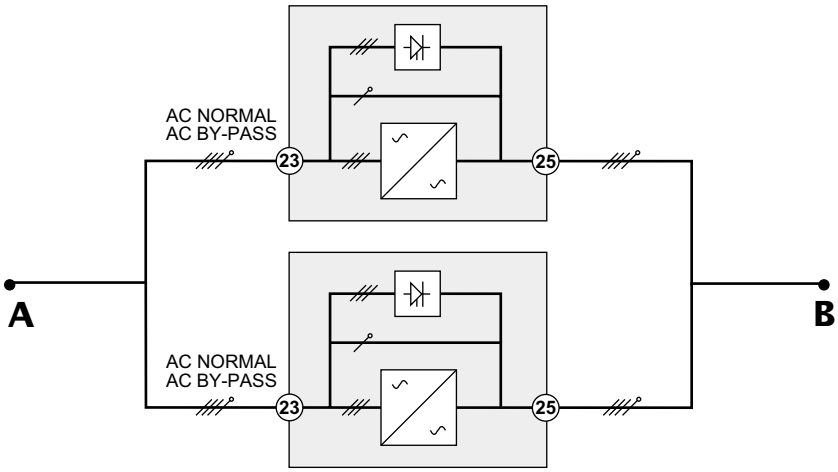

Note. In parallel configurations, the residual-current earth-leakage protection system, common for all UPS units, must be installed upstream.

2. Installation

Parallel configuration without external bypass cubicle and with separate Normal and Bypass AC inputs (maximum two units in parallel)

The requirements for the different system earthing arrangements (SEA) are similar to those for single UPS configurations. In the diagrams on page 15, simply replace the single UPS units between points A, B and C by the following parallel configuration.

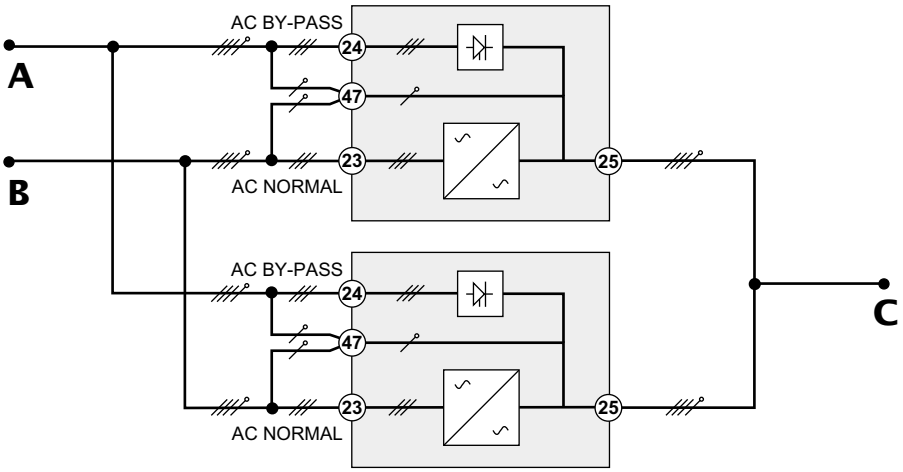

Parallel configuration with external bypass cubicle and with common Normal and Bypass AC inputs (maximum four units in parallel)

The requirements for the different system earthing arrangements (SEA) are similar to those for single UPS configurations. In the diagrams on page 14, simply replace the single UPS units between points A and B by the following parallel configuration.

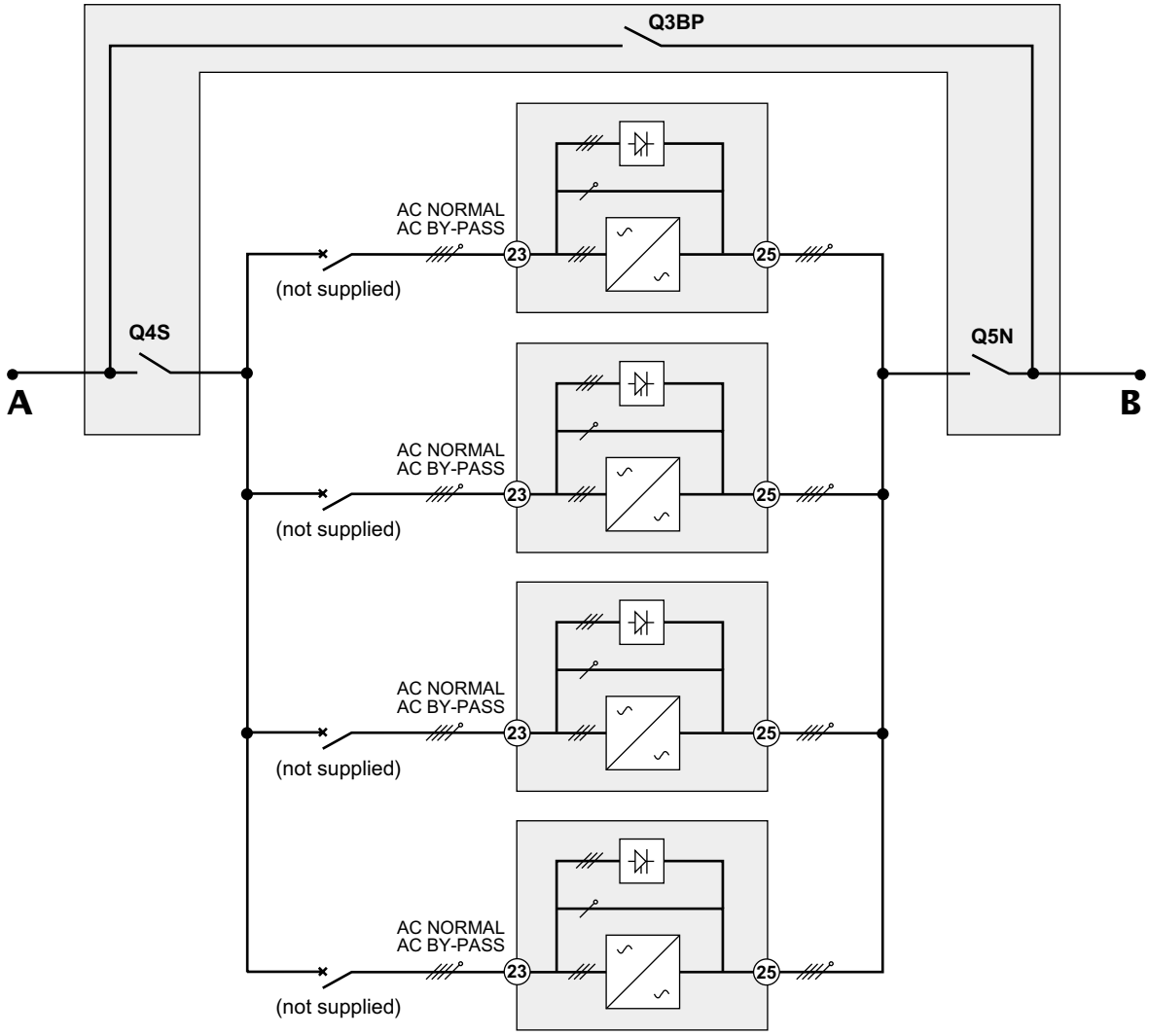

Parallel configuration with external bypass cubicle and with separate Normal and Bypass AC inputs (maximum four units in parallel)

The requirements for the different system earthing arrangements (SEA) are similar to those for single UPS configurations. In the diagrams on page 15, simply replace the single UPS units between points A, B and C by the following parallel configuration.

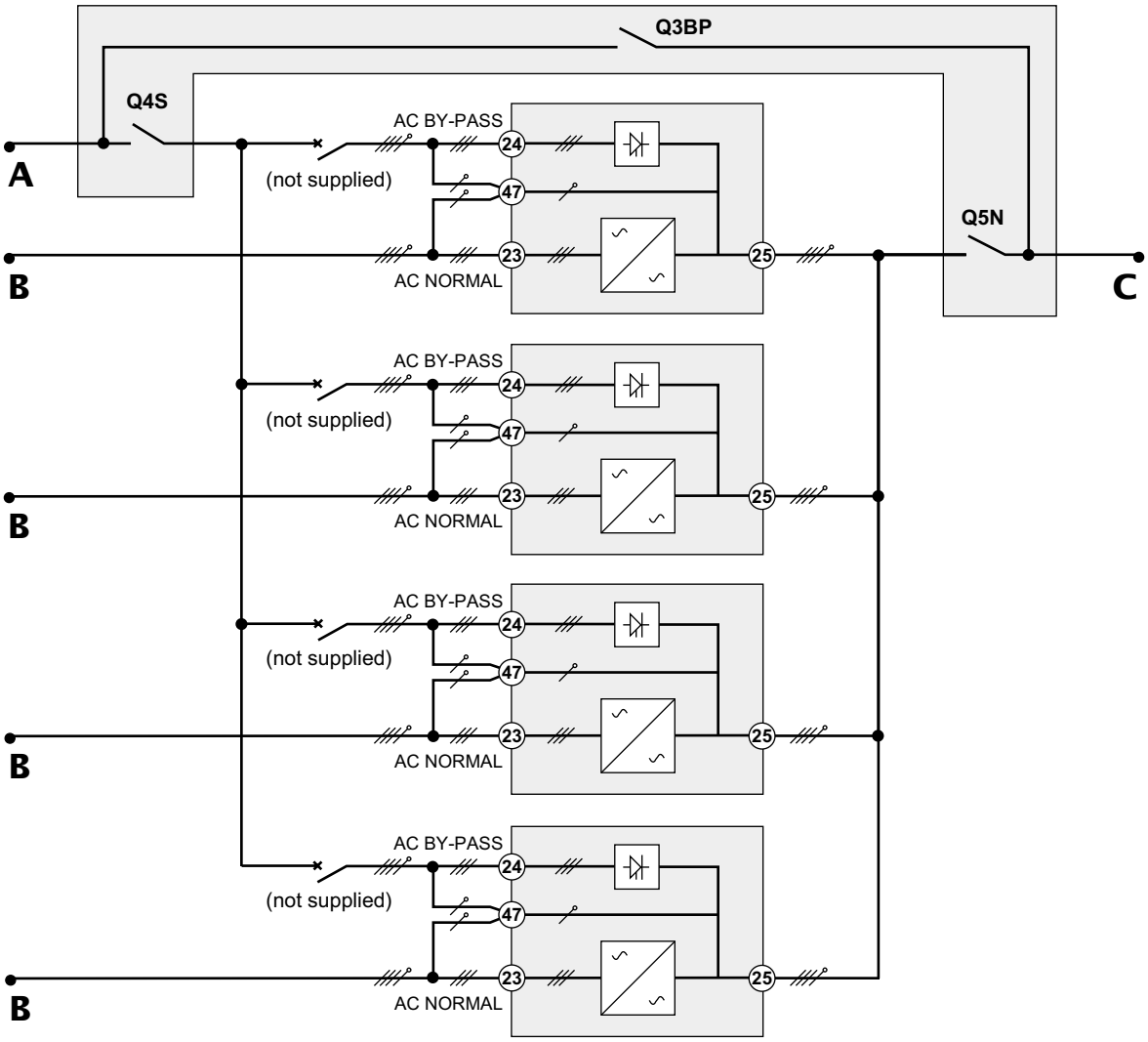

Note. In parallel configurations, the residual-current earth-leakage protection system, common for all UPS units, must be installed upstream.

2. Installation

2.5 Connection of power cables in a single UPS unit

UPS with common Normal and Bypass AC inputs

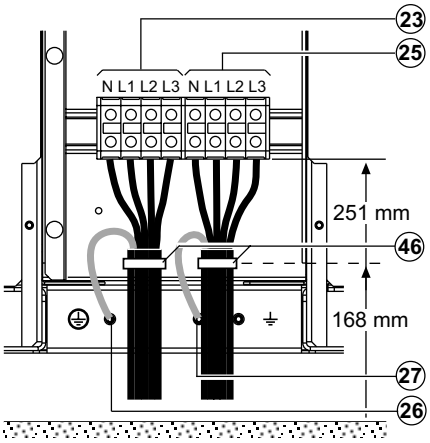

To access the connection terminal blocks, see section 1.2.
1 - The earthing conductors must be connected to the earthing connectors (26) and (27).
2 - Connect the four conductors of the Normal AC source to terminal block (23).
3 - Connect the four conductors supplying the load to terminal block (25).
4 - Fit the cable ties (46).
5 - Put all panels and covers back in place (see section 1.2).

Note. The cable ties come with the UPS.

UPS with separate Normal and Bypass AC inputs

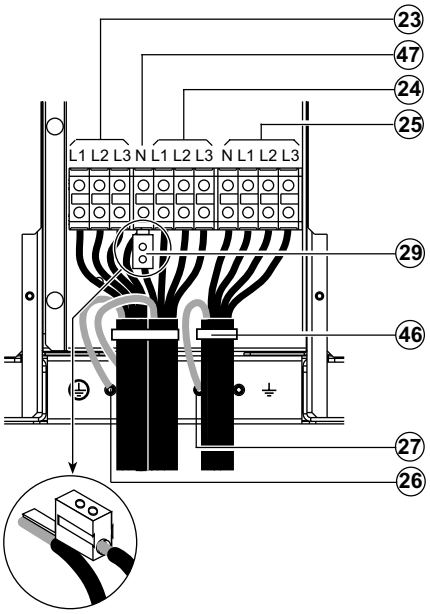

To access the connection terminal blocks, see section 1.2.
1 - The earthing conductors must be connected to the earthing connectors (26) and (27).
2 - Connect the two neutral conductors of the Normal and Bypass AC sources to the common neutral terminal (47):
- if the cross-section is ≤ 10 mm², connect the two conductors to terminal (47) without using the accessory terminal (29),
- if the cross-section is > 10 mm², use the accessory terminal (29) for one conductor and connect it to terminal (47).

3 - Connect the three phases of the Normal AC source to terminal block (23).
4 - Connect the three phases of the Bypass AC source to terminal block (24).
5 - Connect the four conductors supplying the load to terminal block (25).
6 - Fit the cable ties (46).
7 - Put all panels and covers back in place (see section 1.2).

Note. The accessory terminal and the cable ties come with the UPS.

Frequency converter

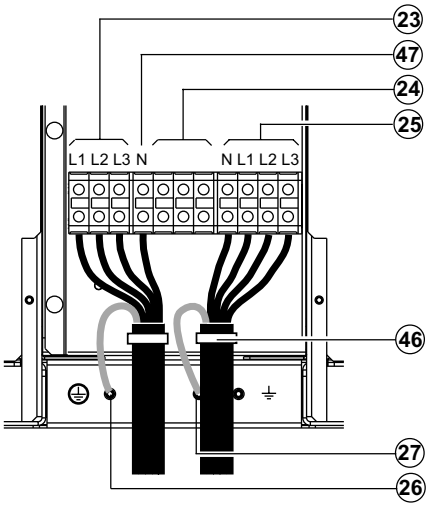

To access the connection terminal blocks, see section 1.2.
1 - The earthing conductors must be connected to the earthing connectors (26) and (27).
2 - Connect the neutral conductor of the Normal AC source to terminal (47).
3 - Connect the three phases of the Normal AC source to terminal block (23).
4 - Connect the four conductors supplying the load to terminal block (25).
5 - Fit the cable ties (46).
6 - Put all panels and covers back in place (see section 1.2).

Note. The cable ties come with the UPS.

Do not connect anything to the Bypass AC source input terminal block (24).

2.6 Connection of power cables for parallel UPS units

Redundant parallel configuration (maximum two UPS units)

UPS units with common Normal and Bypass AC inputs

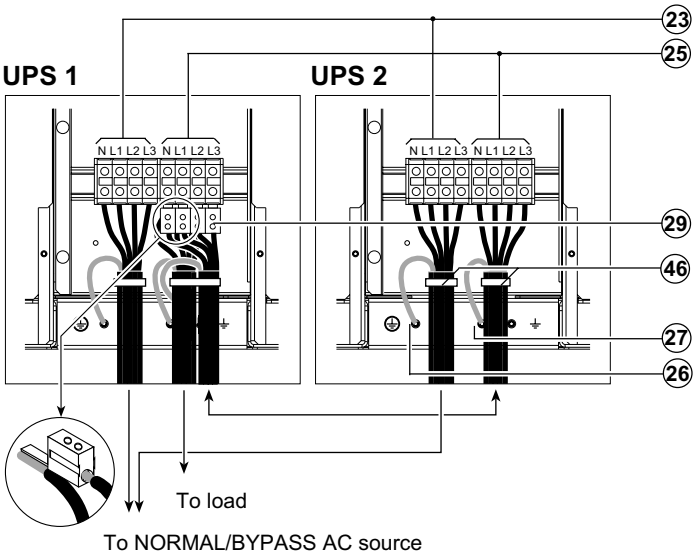

To access the connection terminal blocks, see section 1.2.
1 - The earthing conductors must be connected to the earthing connectors (26) and (27).
2 - Connect the four conductors of the Normal AC source to terminal block (23) in each UPS unit.
3 - Connect the four conductors of the supplied loads to terminal block (25) in each UPS unit.
Note. Use of the accessory terminals (29) is required for connection of load conductors if the cross-section is > 10 mm² in UPS1.
4 - Fit the cable ties (46).
5 - Put all panels and covers back in place (see section 1.2).

Note. The accessory terminals and the cable ties come with the UPS.

UPS units with separate Normal and Bypass AC inputs

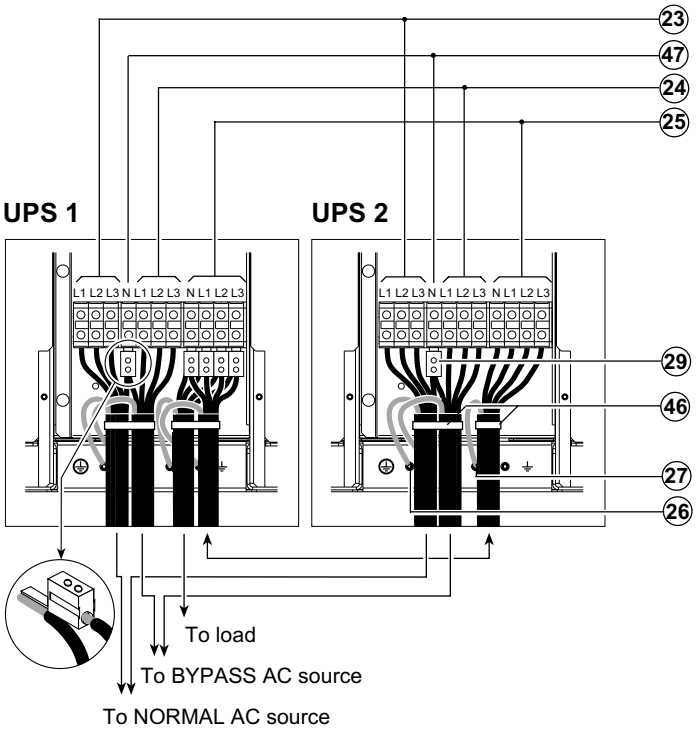

To access the connection terminal blocks, see section 1.2.
1 - The earthing conductors must be connected to the earthing connectors (26) and (27).
2 - Connect the two neutral conductors of the Normal and Bypass AC sources to terminal (47) in each UPS unit.
- if the cross-section is ≤ 10 mm², connect the two conductors to terminal (47) without using the accessory terminal (29) .
- if the cross-section is > 10 mm², use the accessory terminal (29) for one conductor and connect it to terminal (47).

3 - Connect the three phases of the Normal AC source to terminal block (23) in each UPS unit.
4 - Connect the three phases of the Bypass AC source to terminal block (24) in each UPS unit.
5 - Connect terminal block (25) in UPS2 to terminal block (25) in UPS1 using the four load conductors (cross-section ≤ 10 mm²).
Note. Use of the accessory terminals (29) is required for connection of the four load conductors if the cross-section is > 10 mm².
6 - Fit the cable ties (46).
7 - Put all panels and covers back in place (see section 1.2).

Note. The accessory terminals and the cable ties come with the UPS.

2. Installation

Parallel configuration for increased capacity (maximum four UPS units)

This configuration requires an external bypass cubicle.

UPS units with common Normal and Bypass AC inputs

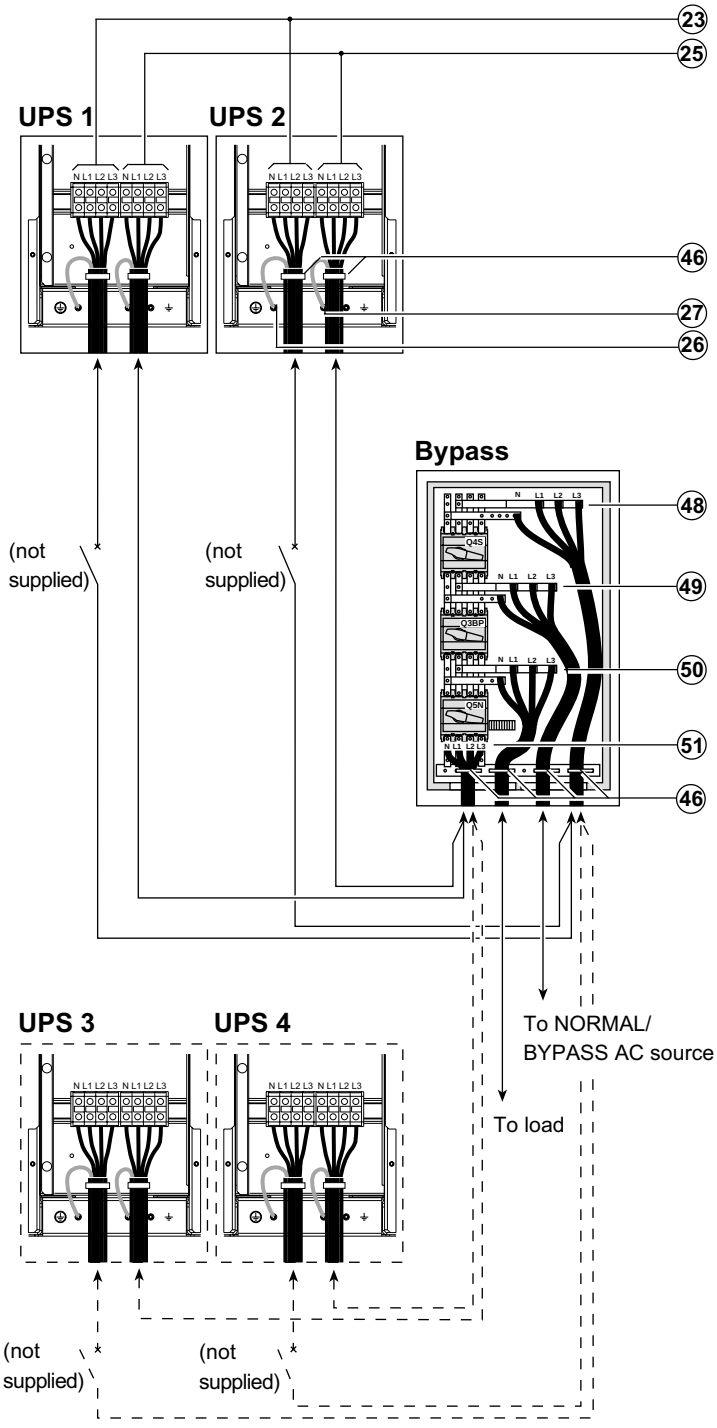

To access the connection terminal blocks, see section 1.2.
1 - The earthing conductors must be connected to the earthing connectors (26) and (27).
2 - Connect the four conductors of the Normal and Bypass sources to terminal (49) in the bypass cubicle.
3 - Connect the four load conductors to terminal (50) in the bypass cubicle.
4 - Connect terminal blocks (23) in each UPS unit to terminal (48) in the bypass cubicle, using cables with identical lengths and cross-sections.
5 - Connect terminal blocks (25) in each UPS unit to terminal (51) in the bypass cubicle, using cables with identical lengths and cross-sections.
6 - Fit the cable ties (46).
7 - Put all panels and covers back in place (see section 1.2).

Note. The cable ties come with the UPS.

UPS units with separate Normal and Bypass AC inputs

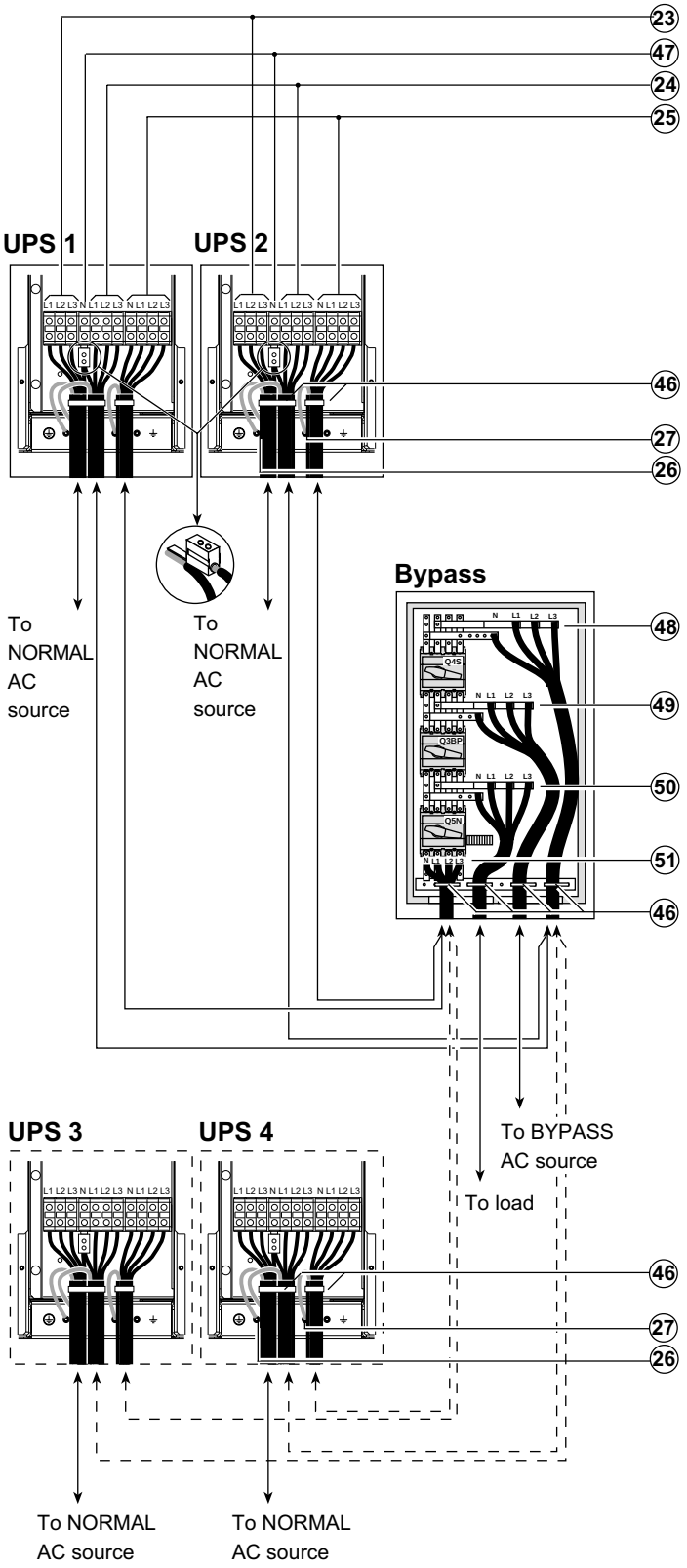

To access the connection terminal blocks, see section 1.2.

1 - The earthing conductors must be connected to the earthing connectors (26) and (27).

2 - Connect the two neutral conductors of the Normal and Bypass AC sources to terminal (47) in each UPS unit.

- if the cross-section is ≤ 10 mm², connect the two conductors to terminal (47) without using the accessory terminal (29) .
- if the cable-section is > 10 mm², use the accessory terminal (29) for one conductor and connect it to terminal (47) .

3 - Connect the three phases of the Normal AC source to terminal block (23) in each UPS unit.

4 - Connect the four conductors of the Bypass AC source to terminal (49) in the bypass cubicle.

5 - Connect terminal blocks (24) in each UPS unit to terminal (48) in the bypass cubicle, using cables with identical lengths and cross-sections.

6 - Connect the four load conductors to terminal (50) in the bypass cubicle.

7 - Connect terminal blocks (25) in each UPS unit to terminal (51) in the bypass cubicle, using cables with identical lengths and cross-sections.

8 - Fit the cable ties (46).

9 - Put all panels and covers back in place (see section 1.2).

Note. The accessory terminals and the cable ties come with the UPS.

2. Installation

Earth interconnection between UPS units connected in parallel

Link the frames of parallel UPS units using an additional earth cable with the following characteristics:
- Same cross-section as the power cables.
- Length as short as possible.
- The cable is not supplied with the UPS.

Carry out the connections as shown in the diagram below:

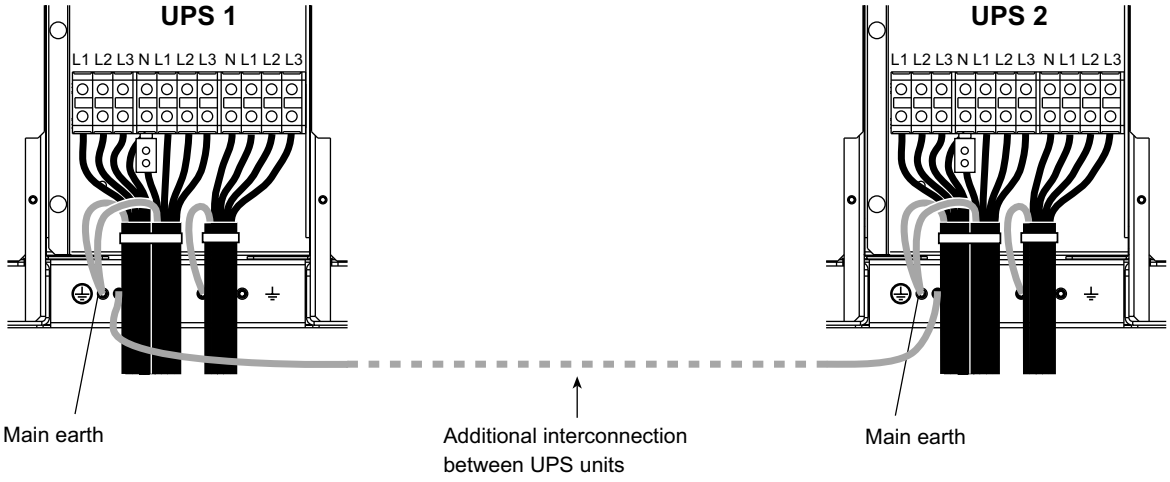

2.7 Auxiliary interconnections between UPS units in parallel configurations

Redundant parallel configuration (maximum two UPS units)

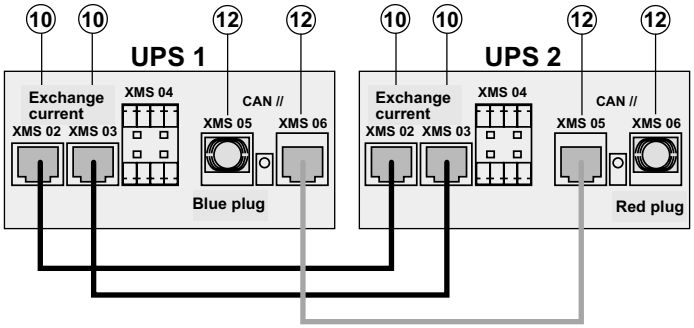

Exchange-current interconnections
Link connectors XMS02 and XMS03 on the two UPS units.
CAN // interconnections
Fit a blue plug on connector XMS05 on UPS1.
Link connector XMS06 on UPS1 to connector XMS05 on UPS2.
Fit a red plug on connector XMS06 on UPS2.

Note. The supplied cables limit the distance between the two UPS units to six metres.

Parallel configuration for increased capacity (maximum four UPS units)

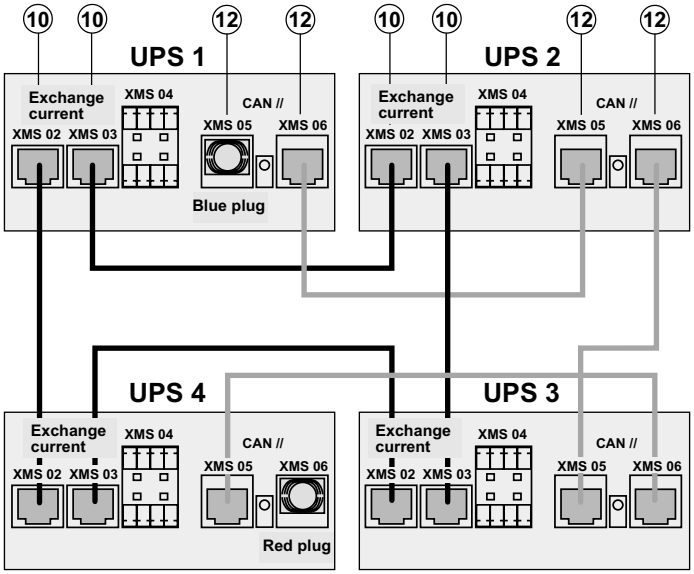

Exchange-current interconnections
Use the XMS02 and XMS03 connectors to create a loop between the UPS units (all the XMS02 and XMS03 connectors must be used).
CAN // interconnections
Daisy-chain the UPS units using the XMS05 and XMS06 connectors. Fit a blue plug on the first UPS unit and a red plug on the last unit (all the XMS05 and XMS06 connectors must be used).

Note. The supplied cables are ten metres long.

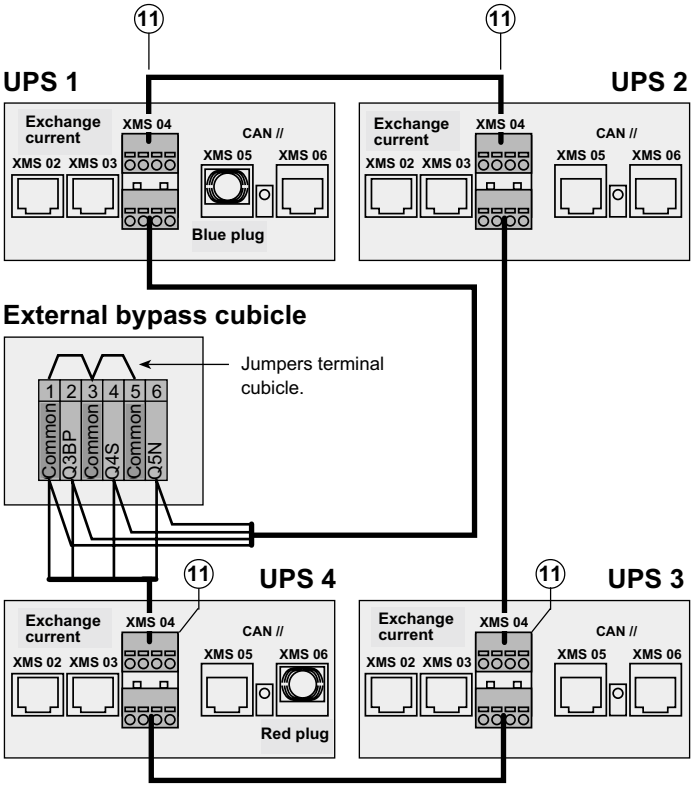

Interconnections with the external bypass cubicle

- Fit jumpers to interconnect terminals 1, 3 and 5 on the auxiliary terminal block in the cubicle.
- Create a loop between the cubicle and the UPS units for terminals 1, 2, 4 and 6 on the auxiliary terminal block in the cubicle. The order for the XMS04 connectors in each UPS unit, from left to right, is common, Q3BP, Q4S and Q5N.

XMS 04

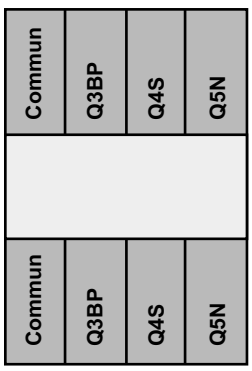

2. Installation

Fitting the protection cover for the auxiliary interconnection cables

The plastic protection cover supplied with the parallel connected UPS units protects the user against direct contact with voltages other than SELVs and ensures the auxiliary interconnection cables are maintained in position.

Be careful not to reverse connectors RJ12 and RJ45 as this may damage them.

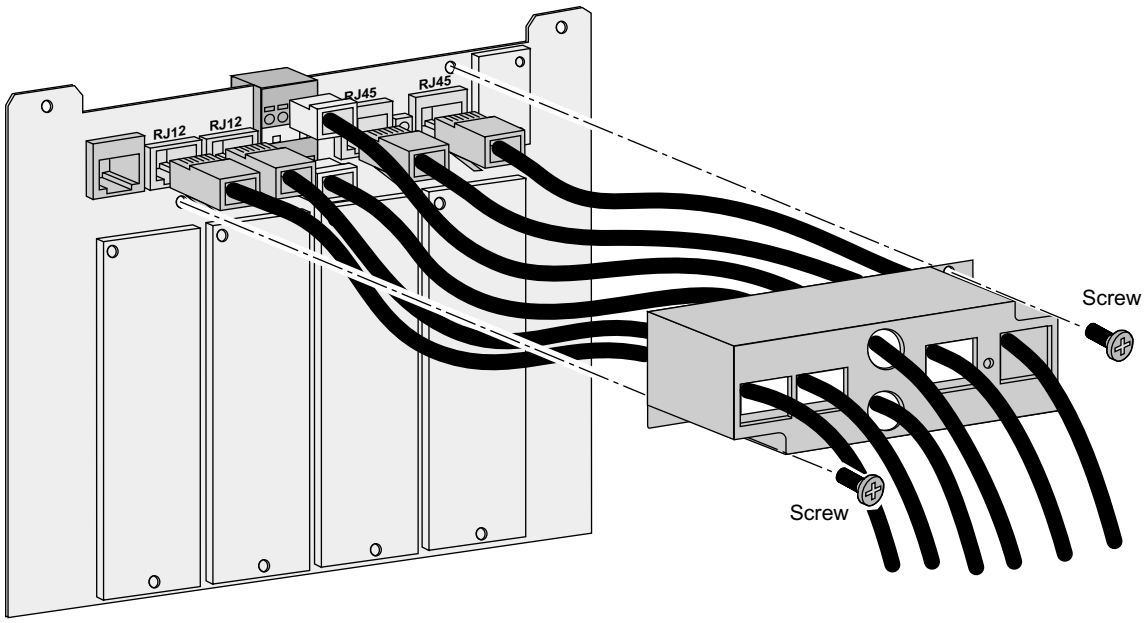

2.8 Connection of the emergency power off terminal block

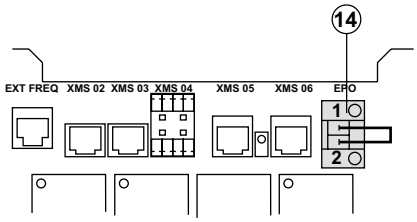

1 - Remove the jumper from terminal block (14).
2 - Connect the emergency power off NC contact to terminals 1 and 2.
3 - Tie the cable down as illustrated in section 2.10.

Caution. In parallel configurations, there must be a single emergency power off (EPO) button with a separate contact for each UPS unit. This button must also cause the protection circuit-breakers upstream of the NORMAL AC and BY-PASS AC sources to be opened.

2.9 Connection of the relay communications card

Isolate and lock-out all power sources for this card before making connections.
Never connect ELSV (extra low safety voltage) and non-ELSV circuits to the different outputs of the same card.

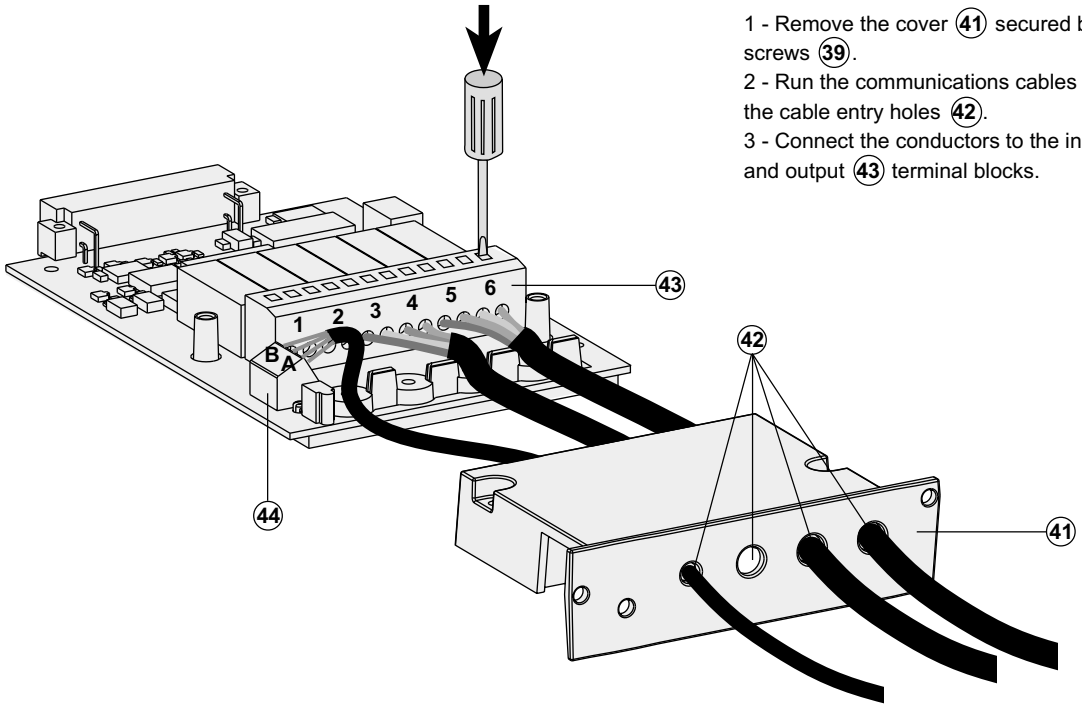

1 - Remove the cover (41) secured by the screws (39).
2 - Run the communications cables through the cable entry holes (42).
3 - Connect the conductors to the input (44) and output (43) terminal blocks.

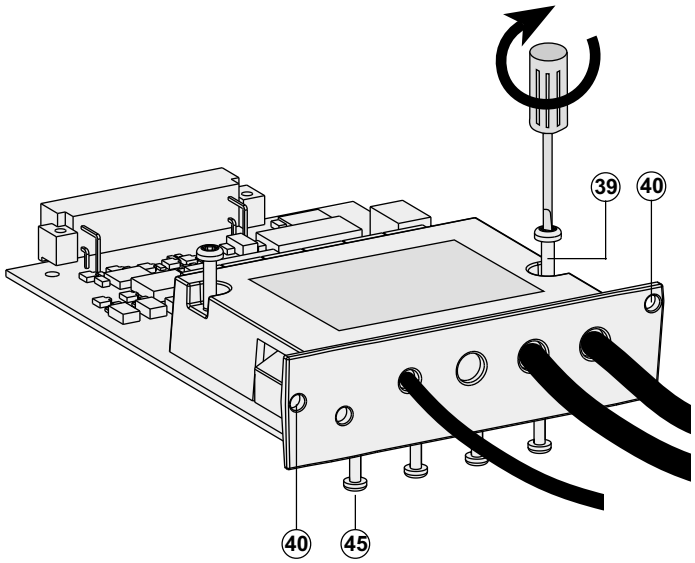

4 - Put the cover back in place and secure it with the screws (39).
5 - Tighten the screws (45) to block the cables.
6 - Indicate the locations of the power sources on the labels.
7 - Insert the card in its slot.
8 - Secure the card with two screws (40).

2. Installation

Characteristics of the contacts on the relay communications card

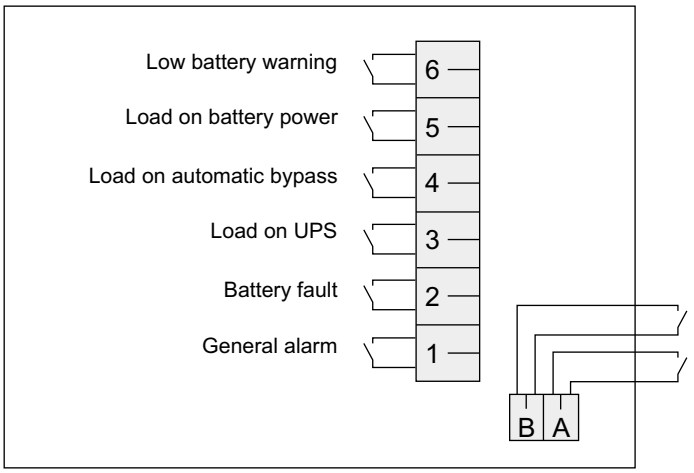

Characteristics of the output contacts:
Permissible voltage: 250 V AC, 30V DC.
Permissible current: 2 A.
Cable: 4 x 0.93 mm², Ø 6.6 ±0.3 mm.

Characteristics of the input contacts:
Switched voltage: 5 V DC.
Consumption: 10 mA.
Cable: 4 x 0.34 mm², Ø 5 ±0.5 mm.

Communications card connection example

If a VLSV (very low safety voltage) source is used, it must always be possible to isolate the communications card from the upstream source to ensure the safety of personnel working on the installation.

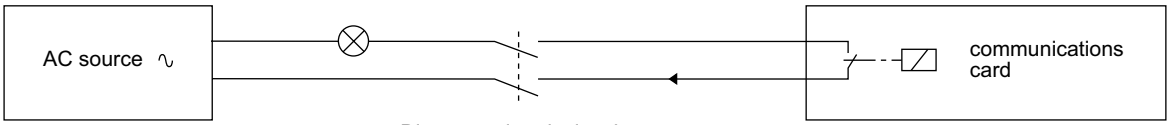

Disconnecting device that can be locked out

2.10 Securing the control/communications cables

Single UPS unit

The following assembly recommendations must be followed to ensure correct positioning and support of the various strands of the control and communication cables on the front face of the UPS:

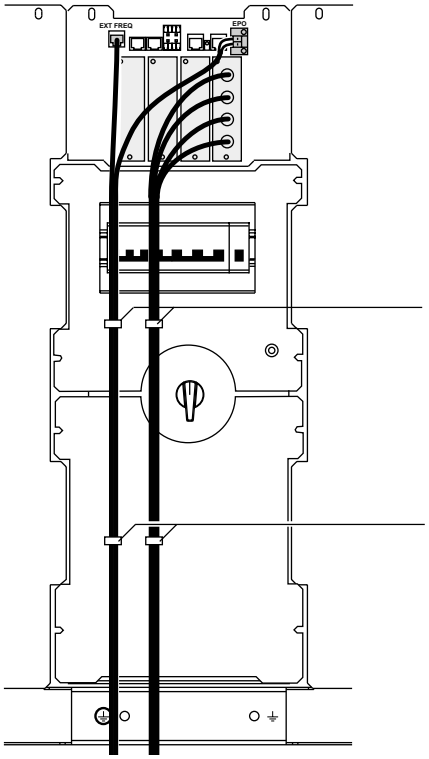

Separate the control and communication cables from the power cables. Run the cables together in front of the protection panels and tie them to the panels as indicated in the figure opposite.

Parallel UPS units

A clip-on ferrite is supplied with parallel UPS units. This ensures an EMC level of class A. It must be fitted as shown in the diagram below:

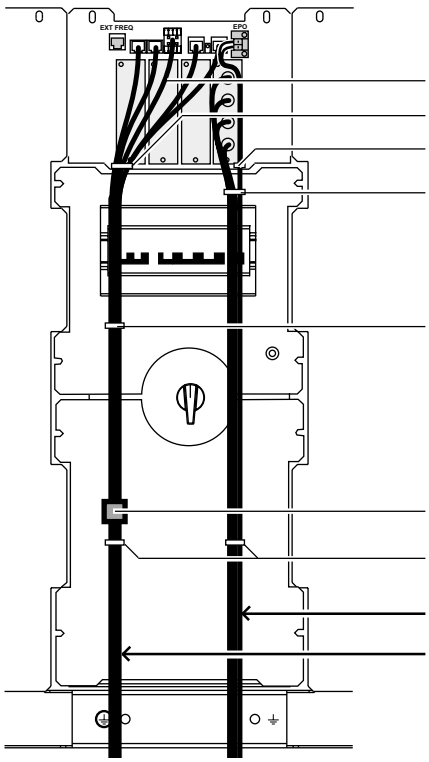

External bypass cubicle cables (not supplied, max. 2.5 mm^2)

Clamping ring

EPO cable to be clamped separately (not supplied, max. 2.5 mm^2)

Ties

Ties

Clip-on ferrite

Ties

EPO and communication cable

Parallel connection cable

2. Installation

2.11 Power connections for an external battery cabinet

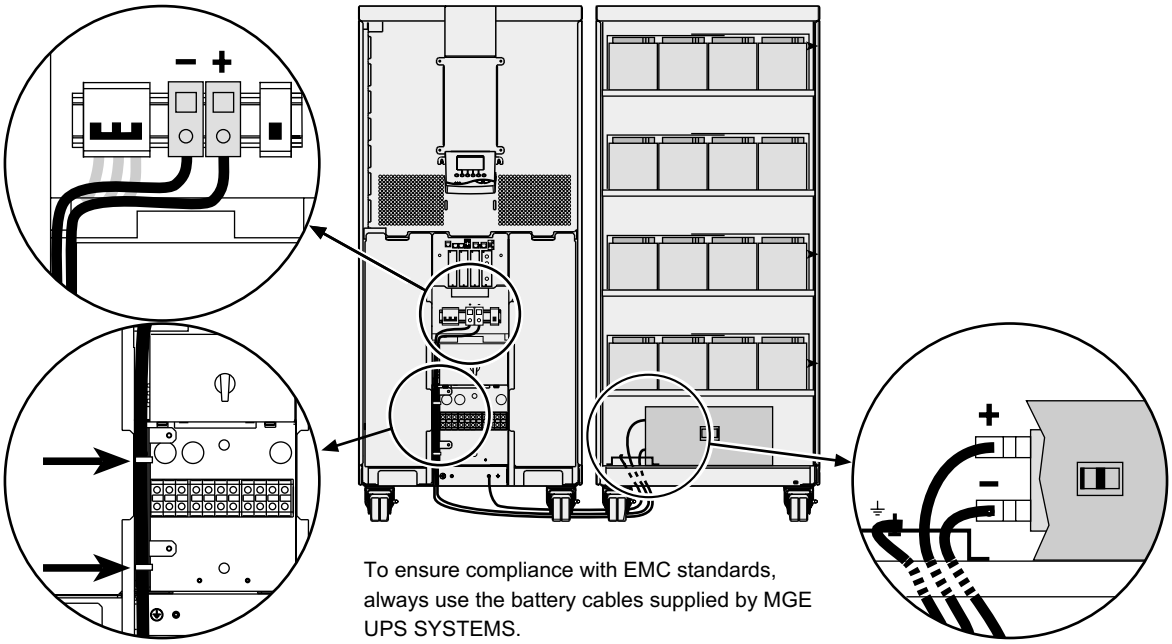

To ensure compliance with EMC standards, always use the battery cables supplied by MGE UPS SYSTEMS.

2.12 Assembly and connection of an empty battery cabinet

Mounting the battery circuit breaker kit

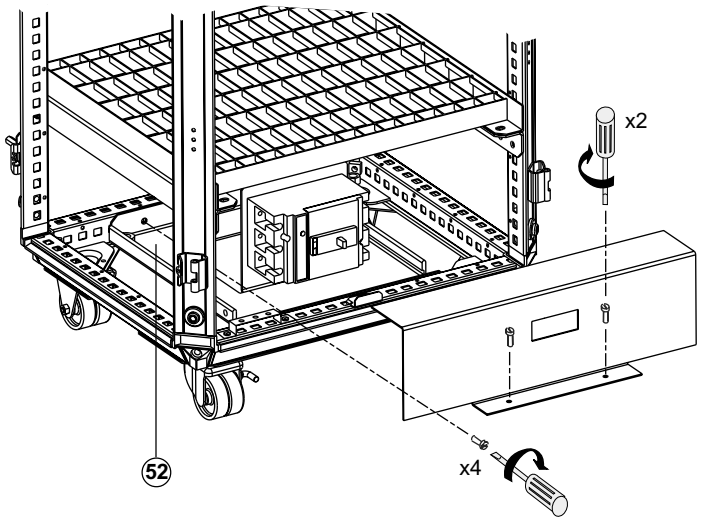

Secure:
1 - The base plate (52) supporting the circuit breaker
2 - Connector XR1
3 - The temperature sensor
4 - The front plate, after connecting the batteries to the circuit breaker

Only one circuit breaker is necessary even if there are several battery cabinets.

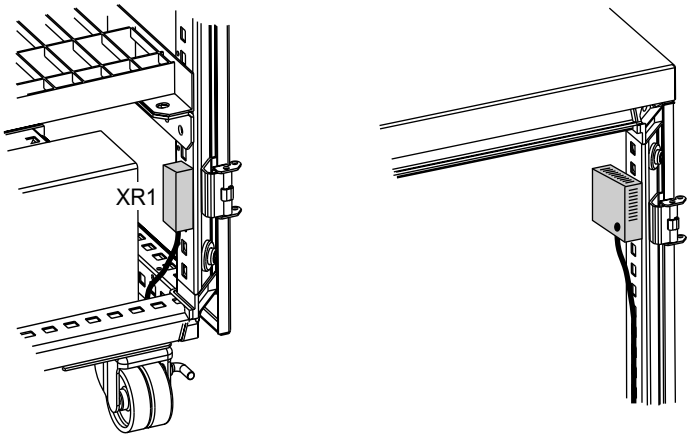

Mounting the shelves and the battery cells

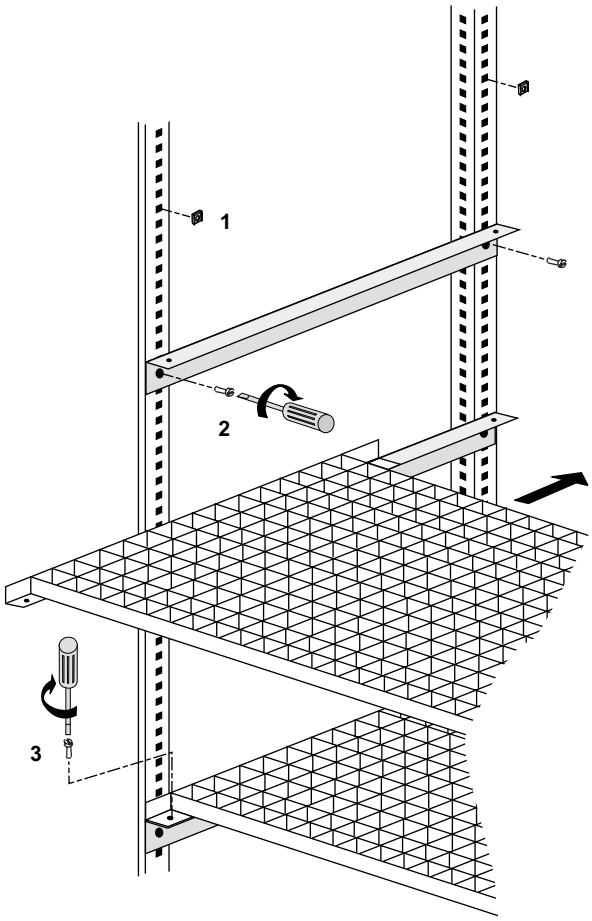

Caution. Assembly of the battery cabinet must be carried out by certified personnel (standard EN 50091-1-2).

Install the shelves at even distances from top to bottom. The minimum clearance between the top of battery cells and the next shelf is 90 millimetres.

1 - Fit the inserts.
2 - Secure the slide rails.
3 - For each shelf: secure the shelf, put the battery cells on the shelf and secure them, interconnect the battery cells.

Interconnect all the shelves and then connect the overall battery assembly to the battery circuit breaker.

2. Installation

2.13 Control connections for an external battery cabinet

1 - Connect the wires for the XR1 connector (circuit breaker) in the external battery cabinet to connector (17) and the wires for the temperature sensor to connector XMD3 (53).
2 - Remove the cover (21), unscrew and pivot forward the communications rack (5), run the cable behind the rack and then in the trough as shown in the illustration.

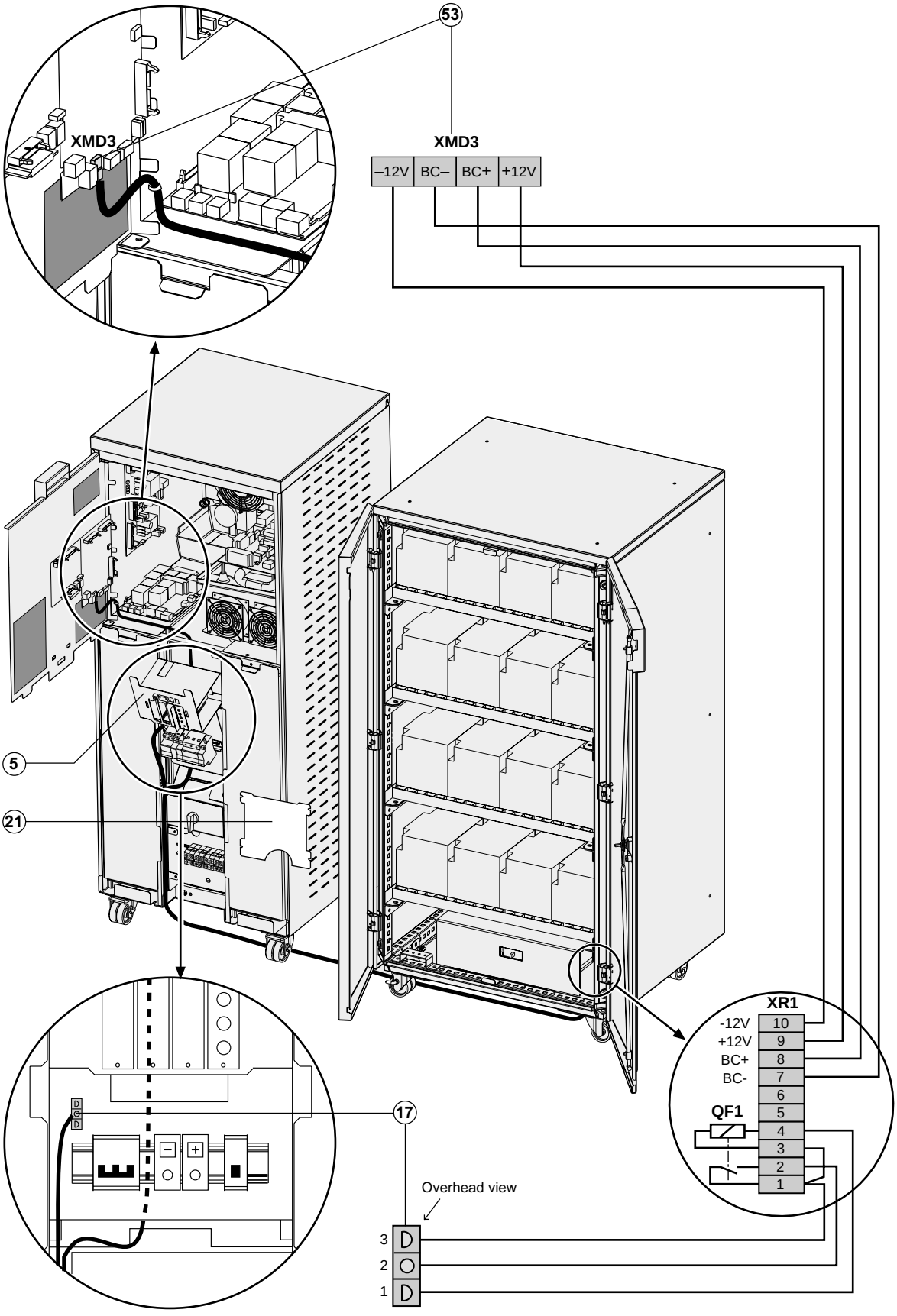

2.14 Connection of an input isolating transformer

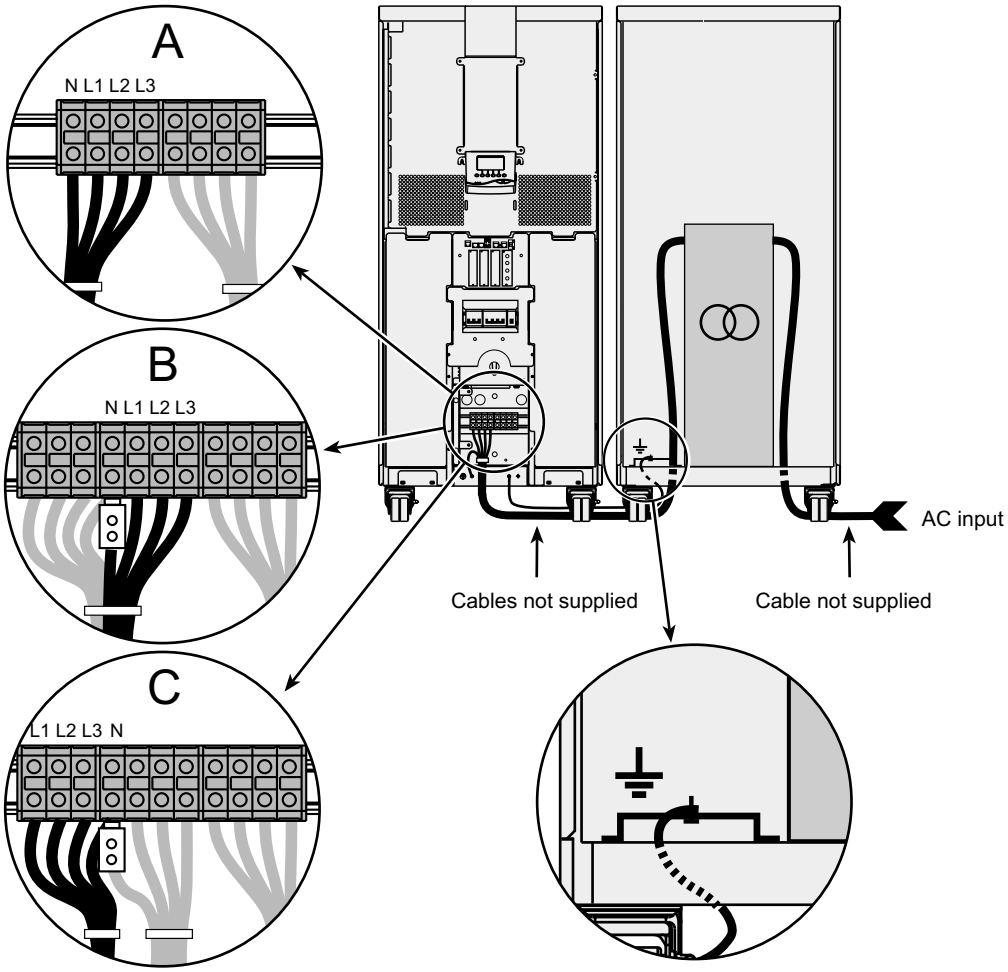

A - Connection of an input transformer for common Normal and Bypass AC source.
B - Connection of a Bypass AC input transformer for separate Normal and Bypass AC sources.
C - Connection of a Normal AC input transformer for separate Normal and Bypass AC sources.

2.15 Connection of an output isolating transformer

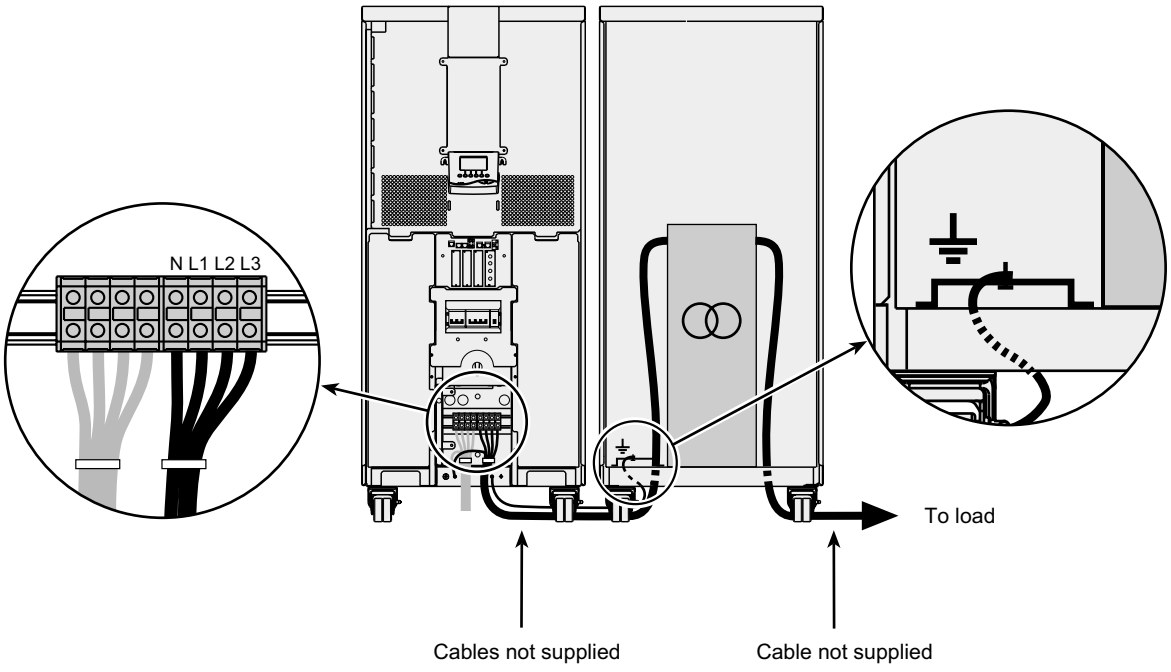

3. Final checks

3.1 Check on the position of the stop on the manual bypass switch (22)

Single UPS

In this case, the stop must be positioned to the right to block switching to the TEST ISO position.

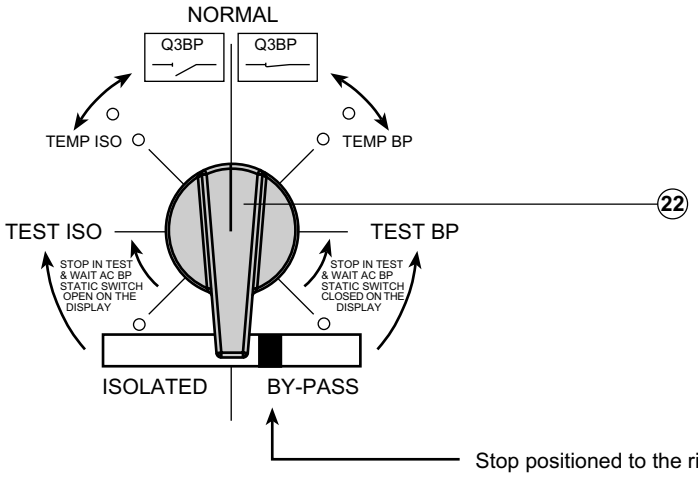

Stop positioned to the right of the switch handle.

Parallel UPS (with or without external bypass cubicle)

In this case, the stop must be positioned to the left to block switching to the TEST BP position.

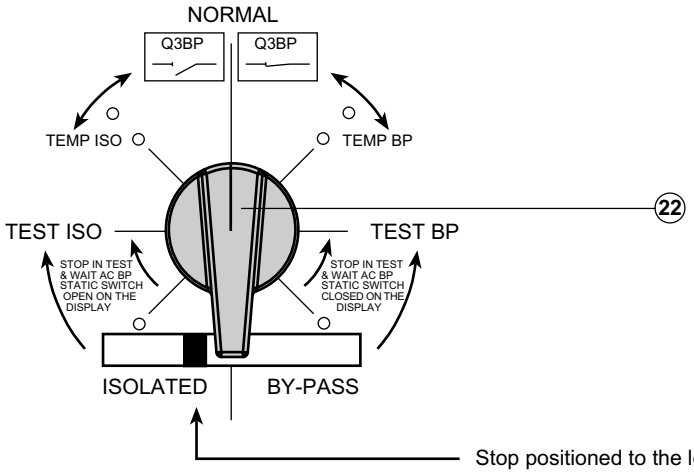

Stop positioned to the left of the switch handle.

All operations concerning system start-up and compliance with standards and regulations, including those related to the battery cabinet, must be carried out by trained and certified personnel before using the UPS.

4.1 Shutting down a single UPS

The UPS remains energised unless it is shut down.

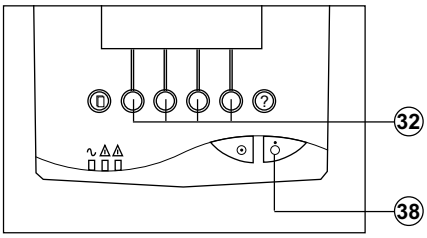

1 - Press the OFF button (38).
2 - Confirm by pressing the function key (32) marked ⏎.

The load is no longer protected by the UPS. It is supplied via the bypass.

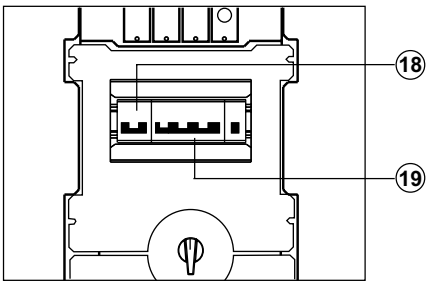

3 - Set the battery circuit breaker QF1 (19) to the OFF position (or trip the battery circuit breakers on the auxiliary cabinets if applicable).
4 - Set the Normal AC input switch Q1 (18) to the OFF position.

The charger no longer operates to keep the batteries fully charged.

4.2 Restarting single UPS

Check that the bypass switch (22) is in the Normal position. If this is the case, continue with this procedure, otherwise refer to paragraph 5.4 "Return to the Normal position, Single UPS".

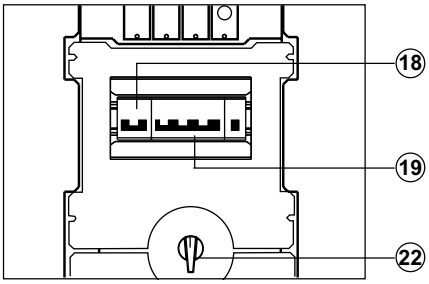

1 - Set the Normal AC source input switch (18) to the ON position.
2 - Wait 10 seconds while the circuits are initialised.
3 - Set the battery circuit breaker QF1 (19) (or the battery circuit breakers in the auxiliary cabinets) to the ON position.
The UPS starts automatically.
LED (34) goes ON.

The load is protected by the UPS.

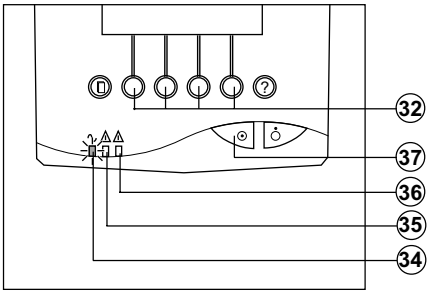

If LED (34) does not go ON, press the ON button (37) (the UPS is in manual start mode) and confirm if necessary by pressing the function key (32) marked ⏎.

If LED (34) still does not go ON, and one of the fault LEDs (35) or (36) is ON, a fault has occurred (see section 5.1).

4. Operation

4.3 Shutting down a parallel configuration

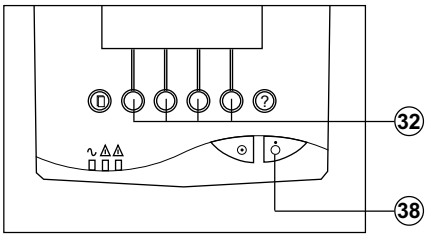

1 - Press the OFF button (38) on each UPS unit.
2 - Confirm by pressing the function key (32) marked ⏎ .

The load is no longer protected by the UPSs. It is supplied via the bypass.

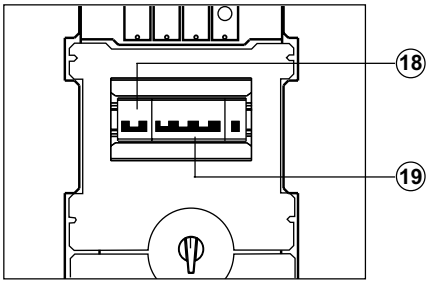

3 - Set the battery circuit breaker (19) (QF1) in each UPS unit to the OFF position (or trip the battery circuit breakers in the auxiliary cabinets if applicable).
4 - Set the input switch (18) (Q1) in each UPS unit to the OFF position.

The charger no longer operates to keep the batteries fully charged.

4.4 Restarting a parallel configuration

Check that the bypass switch (22) is in the Normal position. If this is the case, continue with this procedure, otherwise refer to paragraph 5.4 "Return to the Normal position, Parallel UPS...".

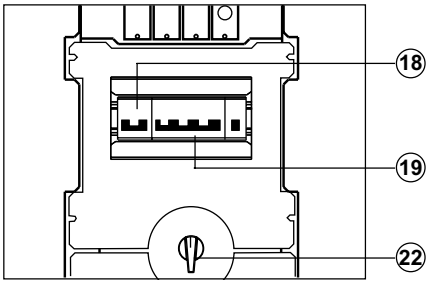

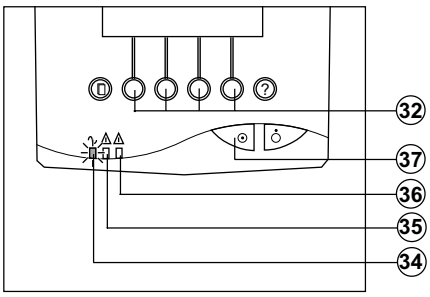

1 - Check that the Normal AC source input switch (Q4S) in the external bypass cubicle is closed.
2 - Check that the output switch (Q5N) in the external bypass cubicle is closed.
3 - Check that the bypass switch (Q3BP) in the external bypass cubicle is open.

Then carry out steps 4 to 6 below on all the UPS units.
4 - Set the Normal AC source input switch (18) to the ON position.
5 - Wait 10 seconds while the circuits are initialised.
6 - Set the battery circuit breaker QF1 (19) (or the battery circuit breakers in the auxiliary cabinets) to the ON position.

The UPS units start automatically. On each unit, LEDs (35) and (36) go OFF and LED (34) goes ON.

The load is protected by the UPSs.

If LED (34) remains OFF, press the ON button (37) on each UPS unit (the UPS is in manual start mode) and confirm if necessary by pressing the function key (32) marked ⏎ .

If LED (34) still does not go ON, and one of the fault LEDs (35) or (36) is ON, a fault has occurred (see section 5.1).

4.5 Operating modes

Normal (double conversion) mode

This is the conventional operating mode, set by default in the factory. Two possible cases.

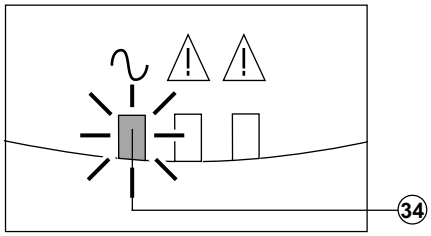

1 - Normal AC source available:
LED (34) is ON.

The load is protected by the UPS.

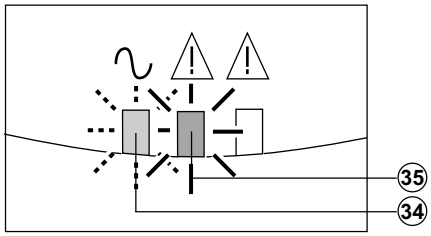

2 - Normal AC source not available:
LED (34) flashes.
LED (35) is ON.
The buzzer sounds intermittently.

The load is supplied by the UPS from battery power.

The display indicates any anomalies related to the AC source or the UPS as well as remedial action if applicable.
Press the function key (32) indicated by the display to turn the buzzer OFF.
The buzzer must be turned off to access the other information on the display.

ECO mode (single UPS only)

The main advantage of this mode is that it reduces the consumption of electrical power.
ECO mode may be selected exclusively via the control panel on the UPS.

Three possible cases:

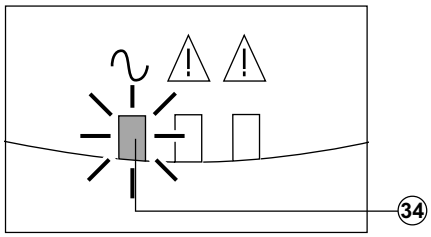

1 - Bypass AC source available:
LED (34) is ON.
The load is supplied in ECO mode.

2 - Bypass AC source not available:
LED (34) is ON.
The buzzer sounds intermittently.
The load is automatically supplied in Normal mode via the Normal AC input.

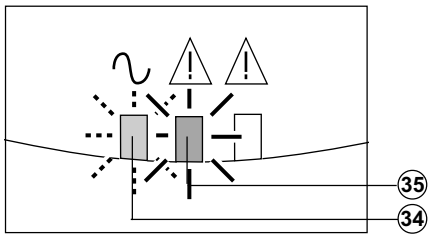

3 - Both Normal and Bypass AC sources not available or out of tolerance:
LED (34) flashes.
LED (35) is ON.
The buzzer sounds intermittently.
The load is supplied by the UPS from battery power.

The display indicates the UPS operating status conditions and the required action.

4. Operation

4.6 Operation on battery power

The load continues to be protected by the UPS when the Normal AC source is not available. Power is supplied by the battery.

Transfer to battery power

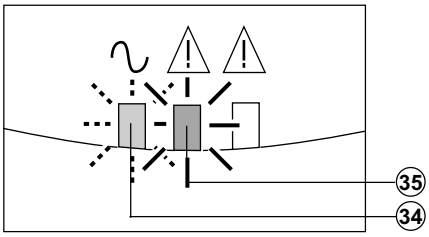

LED (34) flashes.
LED (35) is ON.
The buzzer sounds intermittently.

The load is supplied by the battery.

Low battery warning

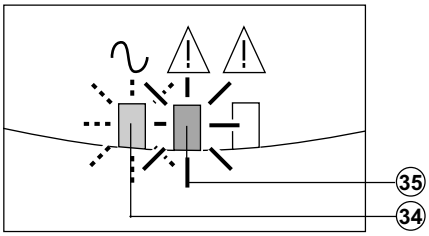

LED (34) flashes.
LED (35) is ON.
The buzzer sounds intermittently

Low battery warning on display. There is very little remaining battery backup time. Close all applications because UPS automatic shutdown is imminent.

End of battery power

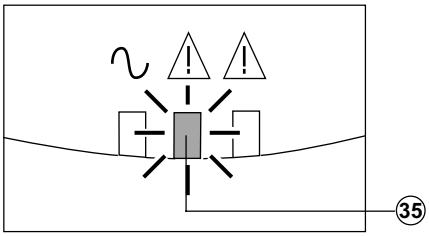

LED (35) is ON.
The buzzer sounds intermittently.

The load is transfered on the AC BYPASS input if it is present.

4.7 Return of Normal AC source

After an outage, the UPS restarts automatically when AC power is restored (unless this function has been disabled via UPS personalisation).

4.8 Restart on battery power

The UPS can start even without Normal AC power.

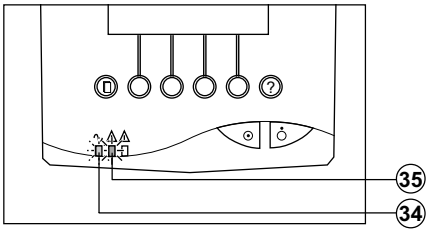

LED (34) flashes.
LED (35) is ON.
The buzzer sounds intermittently.

Caution. This function is no longer available if the UPS has been completely de-energised.

4.9 UPS personalisation

Access to the personalisation functions

Personalisation must be carried out with the manual bypass switch (22) in the TEST BP position.

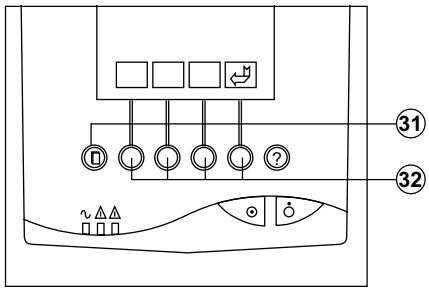

1 - Press the menu key (31).
2 - Select "Settings", then "Personalisation" using the function keys (32) ↑ or ↓.
3 - Confirm by pressing the function key (32) marked ⏎.
4 - Enter the password by successively selecting each icon using the corresponding function key.
5 - Confirm by pressing the function key (32) marked ⏎.
6 - To save the personalisation settings, confirm by pressing the function key (32) marked ⏎.

The password Ø Ø Ø ⏎ is factory set.

To change the password, see the Settings menu.

Operating mode

Function	Factory setting	Options
UPS operating mode	Normal	ECO
UPS automatic start	Disabled	Enabled
Authorised number of starts	4	1 to 255
Delay before reset of number of executed automatic starts	4 seconds	1 to 60 seconds

Frequency

UPS output frequency	50 Hz	60 Hz
Tolerance for Bypass AC source	± 8 %	± 0.5 - 1 - 2 - 4 %
Rate of synchronisation with Bypass AC source	1 Hz / s	2 Hz / s
External frequency synch.	Disabled	Enabled

Automatic bypass

Transfer to bypass	Enabled	Disabled
Transfer to bypass with Bypass AC source out of tolerance	Enabled	Disabled

Battery

Low battery warning threshold if battery monitor inactive	40% remaining backup time	20 - 60 - 80% remaining backup time
Low battery warning threshold if battery monitor active	4 minutes of battery backup time	1 to X minutes of battery backup time
Interval between two battery tests	30 days	every 1 to 3 months
Deep discharge	Not allowed	Allowed
Automatic parameter identification	Enabled	Disabled

4. Operation

Transformers

Normal AC input transformer	None	Present
Bypass AC input transformer	None	Present
Output transformer	None	Present

4.10 Relay contacts (communications card)

	Inputs	Factory setting	Options (available on both contacts)
1.A	—/—	UPS ON	- Room temperature fault - Transfer to bypass disabled - Transfer to bypass disabled if Bypass AC source out of tolerance - Desynchronise UPS from Bypass AC source
1.B	—/—	UPS OFF	

	Outputs	Factory setting	Options (available on all contacts)
1.1	—/—	General alarm (1)	- Overload - PFC fault - Inverter fault - Charger fault - Automatic-bypass fault - Bypass AC source out of tolerance - Battery-temperature fault - Fan fault - Emergency power off activated - Battery circuit breaker(s) open - Phase-sequence fault on Normal or Bypass AC source - Blown fuse(s) - Transfer to Bypass AC source disabled - Operation in ECO mode - UPS on Bypass AC source
1.2	—/—	Battery fault	
1.3	—/—	Load on UPS	
1.4	—/—	Load on automatic bypass	
1.5	—/—	Load on battery power	
1.6	—/—	Low battery warning	

The indications 1.X become 2.X for a second identical card in the UPS.
Contacts are of the NO (normally open) type.

(1) The general alarm can be tested by opening the battery circuit breaker.

4.11 Display functions

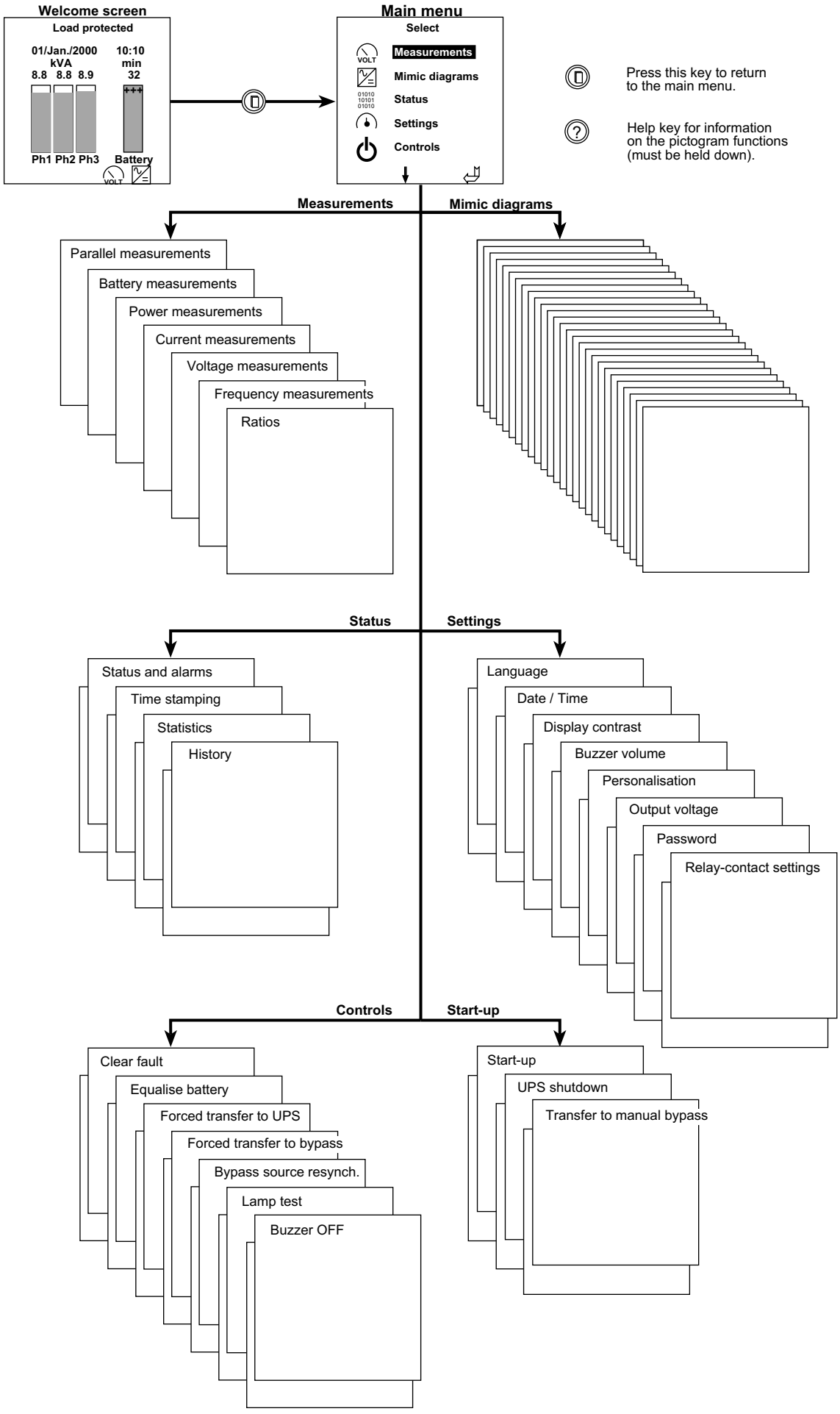

5. Maintenance

5.1 Identification of alarms

Alarm conditions are identified by LEDs (34), (35) and (36) and the buzzer.

LED (34)	LED (35)	LED (36)	Buzzer	Signification
		-	Intermittent	Normal AC source not available
-		-	Intermittent	UPS shut down following end of battery power
-	-		Intermittent	UPS shut down on fault requiring servicing by after-sales support

Detailed information on all alarms is supplied on the display.
1 - On the screen, select the alarm for which information is required.
2 - Hold down the corresponding function key to display the possible causes of the fault and the required action.

5.2 Life Cycle Monitoring (LCM)

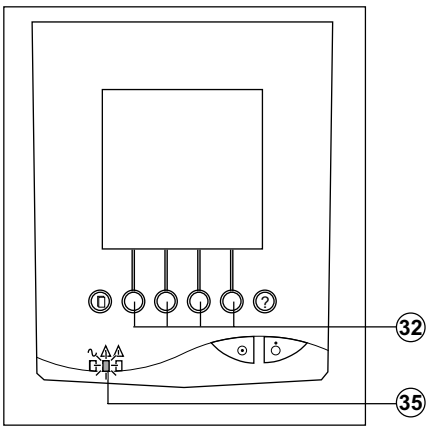

◗ The “Life Cycle Monitoring” function provides UPS maintenance advice to guarantee installation availability for the user.

◗ The display gives 3 messages enabling the following to be identified:
- The end of the contractual legal warranty: “**End of warranty check recommended**”.
- Regular maintenance requirements and the end of service life for consumable components: “**Technical check recommended**”.
- The end of the battery service life: “**Battery check required**”.

In addition to these messages, the minor fault LED (35) lights up and the buzzer sounds.
These messages can be deleted by pressing the function key (32). This also causes LED (35) to go out, the buzzer to stop and the removal of the “Global Alarm” remote signalling.

5.3 UPS isolation

Single UPS

To isolate the UPS from the electrical power source and supply the load directly by the Normal or Bypass AC source, the manual bypass switch must be used as indicated below.

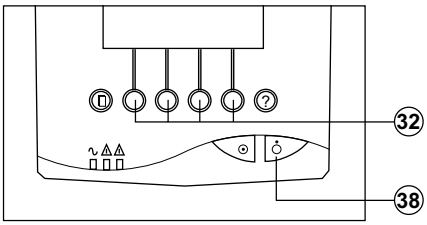

1 - Shut down the UPS by pressing the OFF button (38).
2 - Confirm by pressing the function key (32) marked ⏎.

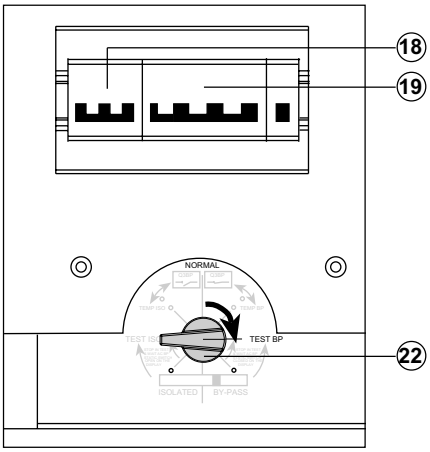

3 - Turn the manual bypass switch (22) from NORMAL to TEST BP position.
4 - Set the battery circuit-breaker (19) (or set the battery circuit-breakers of the auxiliary cabinets if any) to OFF.
5 - Set the input circuit-breaker (18) to OFF.
6 - Turn the manual bypass switch (22) from TEST BP to BYPASS position.

The load is no longer protected by the UPS, but continues to be supplied with AC power.

UPS maintenance or servicing can now be carried out.

Frequency converter

1 - Shut down the UPS by pressing the OFF button (38).
2 - Confirm by pressing the function key (32) marked ⏎.

The load is no longer protected by the unit.

3 - Set the battery circuit-breaker (19) (or set the battery circuit-breakers of the auxiliary cabinets if any) to OFF.
4 - Set the input circuit-breaker (18) to OFF.
5 - To ensure operator safety, turn the manual bypass switch (22) from the Normal position to the Bypass position.

UPS maintenance or servicing can now be carried out.

UPS operating in ECO mode

If supplied by the network via the AC Bypass channel:

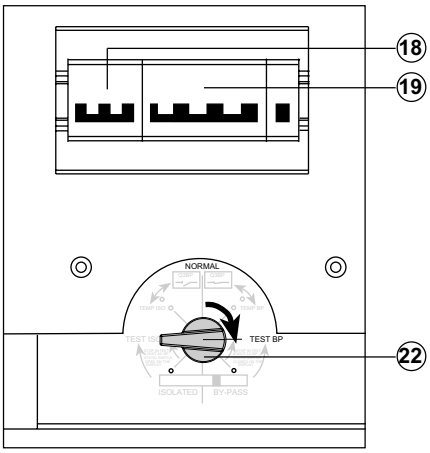

1 - Turn the manual bypass switch (22) from NORMAL to TEST BP position.
2 - Set the battery circuit-breaker (19) (or set the battery circuit-breakers of the auxiliary cabinets if any) to OFF.
3 - Set the input circuit-breaker (18) to OFF.
4 - Turn the manual bypass switch (22) from TEST BP to BYPASS position.

The load is no longer protected by the UPS, but continues to be supplied with AC power.

UPS maintenance or servicing can now be carried out.

5. Maintenance

If supplied by the UPS:

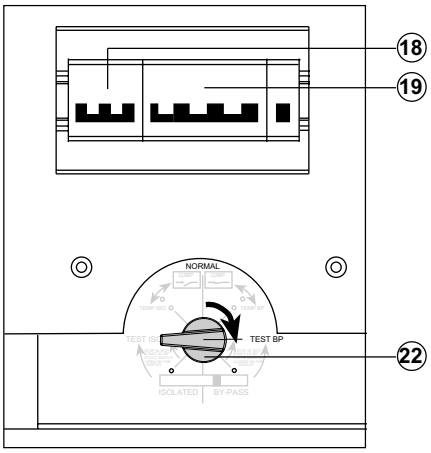

1 - Shut down the UPS by pressing the OFF button (38).
2 - Confirm by pressing the function key (32) ⏎ twice.
3 - Turn the manual bypass switch (22) from NORMAL to TEST BP position.
4 - Set the battery circuit-breaker (19) (or set the battery circuit-breakers of the auxiliary cabinets if any) to OFF.
5 - Set the input circuit-breaker (18) to OFF.
6 - Turn the manual bypass switch (22) from TEST BP to BYPASS position.

The load is no longer protected by the UPS, but continues to be supplied with AC power.

UPS maintenance or servicing can now be carried out.

Parallel UPS configuration without external bypass cubicle

Shutdown and isolation of the first UPS unit

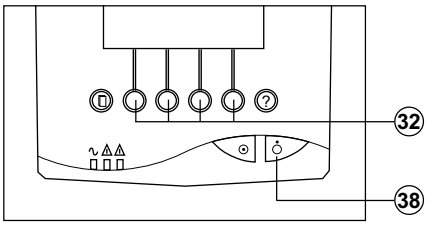

1 - Shut down the UPS by pressing the OFF button (38).
2 - Confirm by pressing the function key (32) marked ⏎.

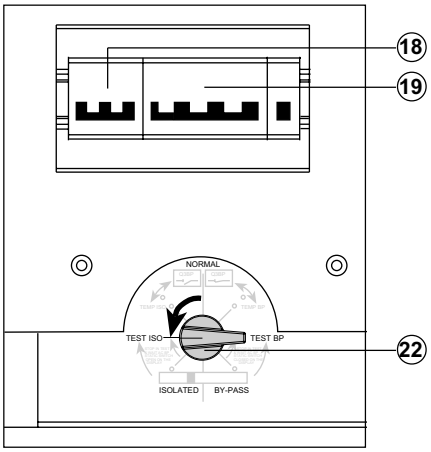

3 - Turn the manual bypass switch (22) from NORMAL to TEST ISO position.
4 - Set the battery circuit-breaker (19) (or set the battery circuit-breakers of the auxiliary cabinets if any) to OFF.
5 - Set the input circuit-breaker (18) to OFF.
6 - Turn the manual bypass switch (22) from TEST ISO to ISOLATED position.

The load is still protected by the other UPS unit.

Maintenance or servicing can now be carried out on the first UPS unit.

Shutdown and isolation of the second UPS unit

1 - Shut down the UPS by pressing the OFF button (38).
2 - Confirm by pressing the function key (32) marked ⏎.
3 - Remove the stop on the manual bypass switch (22) (see page 31).
4 - Turn the manual bypass switch (22) from NORMAL to TEST BP position.
5 - Set the battery circuit-breaker (19) (or set the battery circuit-breakers of the auxiliary cabinets if any) to OFF.
6 - Set the input circuit-breaker (18) to OFF.
7 - Turn the manual bypass switch (22) from TEST BP to BYPASS position.

The load is no longer protected by the UPS, but continues to be supplied with AC power.

Maintenance or servicing can now be carried out.

Parallel UPS configuration with external bypass cubicle

Shutdown and isolation of one UPS unit

First check that the total capacity of the remaining UPS units is sufficient to supply the connected load.

1 - Shut down the UPS by pressing the OFF button (38).
2 - Confirm by pressing the function key (32) marked ⇦.
3 - Turn the manual bypass switch (22) from NORMAL to TEST ISO position.
4 - Set the battery circuit-breaker (19) (or set the battery circuit-breakers of the auxiliary cabinets if any) to OFF.
5 - Set the input circuit-breaker (18) to OFF.
6 - Turn the manual bypass switch (22) from TEST ISO to ISOLATED position.

The load is still protected by the other UPS units.
Maintenance or servicing can now be carried out on the UPS unit that has been shut down.

Shutdown and isolation of all the UPS units

1 - Shut down each UPS unit by pressing their OFF buttons (38).
2 - Confirm by pressing the function key (32) marked ⇦.
3 - Set switch Q3BP in the external bypass cubicle to the ON position.
4 - Set switch Q5N in the external bypass cubicle to the OFF position.
5 - Set switch Q4S in the external bypass cubicle to the OFF position.
6 - Turn the manual bypass switch (22) of each UPS unit from NORMAL to TEST ISO position.
7 - Set the battery circuit-breaker (19) (QF1) of each UPS unit (or of the auxiliary cabinets if any) to OFF.
8 - Set the input circuit-breaker (18) (Q1) of each UPS unit to OFF.
9 - Turn the manual bypass switch (22) of each UPS unit from TEST ISO to ISOLATED position.

The load is no longer protected by the UPS, but continues to be supplied with AC power.

Maintenance or servicing can now be carried out.

5. Maintenance

5.4 Return to the Normal position

Single UPS

To isolate the UPS from the electrical power source and supply the load directly by the Normal or Bypass AC source, the manual bypass switch must be used as indicated below.

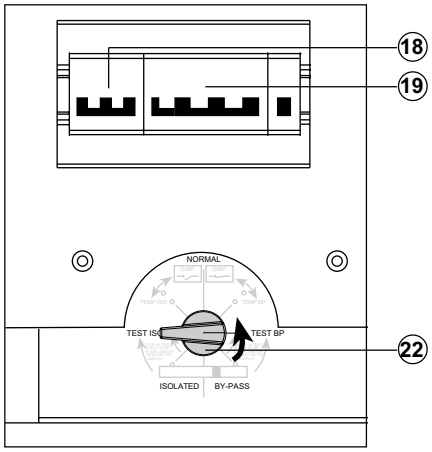

1 - Turn the manual bypass switch (22) from BYPASS to TEST BP position.
2 - Wait until the static stitch closes. The control panel should display:

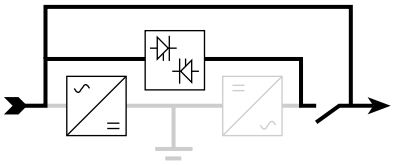

3 - Set the input circuit-breaker (18) to ON.
4 - Set the battery circuit-breaker (19) (or set the battery circuit-breakers of the auxiliary cabinets if any) to ON.
5 - Turn the manual bypass switch (22) from TEST BP to NORMAL position.

The UPS unit starts automatically.
LED (34) is ON.

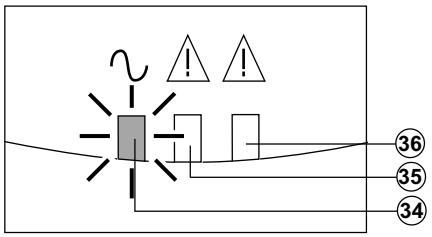

If LED (34) remains OFF, press the ON button (37) (the system is in manual start mode) and, if necessary, confirm by pressing the function button (32) marked ⏎.

If LED (34) still remains OFF and either of LEDs (35) or (36) is ON, a fault has occurred (see section 5.1).

Frequency converter

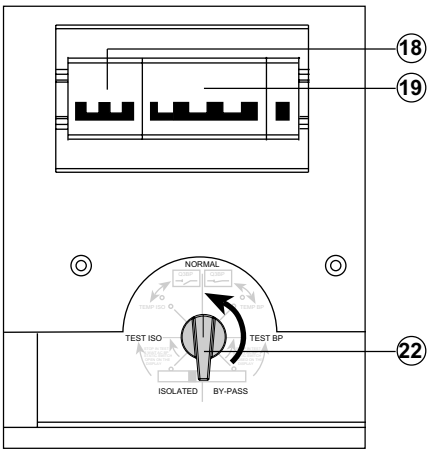

1 - Turn the manual bypass switch (22) from BYPASS to NORMAL position.
2 - Wait until the system is initialised.
3 - Set the input circuit-breaker (18) to ON.
4 - Set the battery circuit-breaker (19) (or set the battery circuit-breakers of the auxiliary cabinets if any) to ON.
5 - Press the ON button (37) and confirm by pressing the function button (32) marked ⏎ .

If LED (34) remains OFF and either of LEDs (35) or (36) is ON, a fault has occurred (see section 5.1).

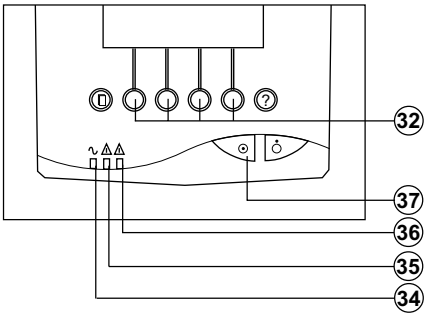

Parallel UPS configuration without external bypass cubicle

Restart the UPS unit on which the manual bypass switch (22) is set to the Bypass position

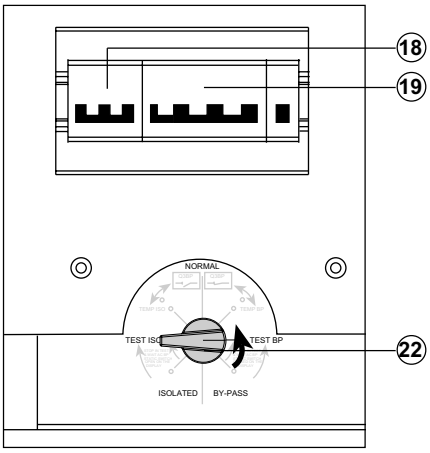

1 - Turn the manual bypass switch (22) from BYPASS to TEST BP position.
2 - Wait until the static stitch closes.

3 - Set the input circuit-breaker (18) to ON.
4 - Set the battery circuit-breaker (19) (or set the battery circuit-breakers of the auxiliary cabinets if any) to ON.
5 - Turn the manual bypass switch (22) from TEST BP to TEMP BP position.
6 - The display goes off while the system is reinitialised. Wait until the display goes back on.
7 - Check that the UPS unit is present in the list on the display and confirm by pressing the function button (32) . The control panel should display:

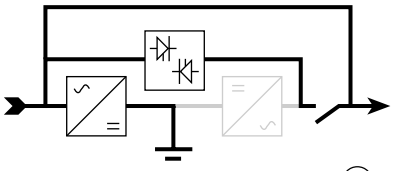

8 - Turn the manual bypass switch (22) from the TEMP BP position to the Normal position.

The UPS unit starts automatically. LED (34) is ON.
The load is protected by the UPS.

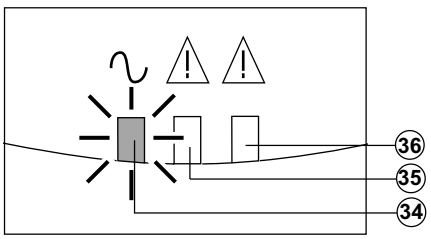

If LED (34) remains OFF and either of LEDs (35) or (36) is ON, a fault has occurred (see section 5.1).

Remember to refit the stop on the manual bypass switch (22) (see page 31).

5. Maintenance

Restart the UPS unit on which the manual bypass switch (22) is set to the Isolated position

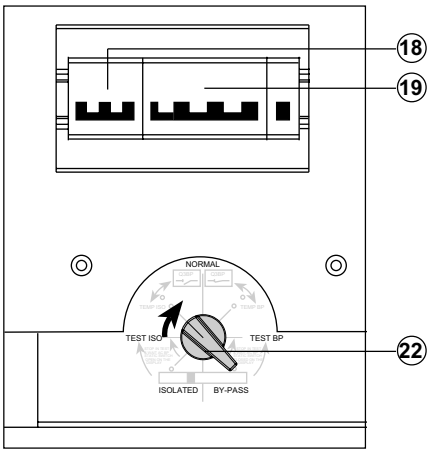

1 - Turn the manual bypass switch (22) from ISOLATED to TEST ISO position.
2 - Wait until the static stitch closes. The control panel should display:

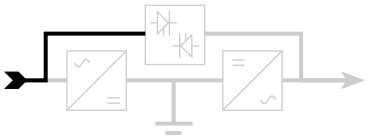

3 - Set the input circuit-breaker (18) to ON.
4 - Set the battery circuit-breaker (19) (or set the battery circuit-breakers of the auxiliary cabinets if any) to ON.
5 - Turn the manual bypass switch (22) from TEST ISO to NORMAL position and wait until the display goes back on.
6 - Check that all the UPS units present in the installation are included in the list on the display and confirm by pressing the function buttons (32) .

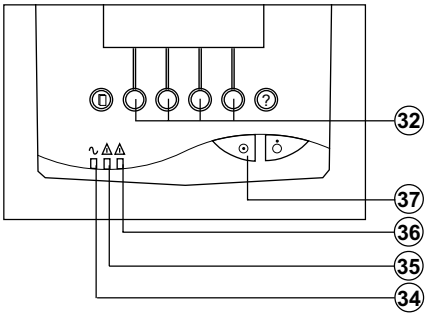

The UPS unit starts automatically. LED (34) is ON.

If LED (34) remains OFF, press the ON button (37) (the system is in manual start mode) and, if necessary, confirm by pressing the function button (32) marked ⏎.
If LED (34) still remains OFF and either of LEDs (35) or (36) is ON, a fault has occurred (see section 5.1).

Parallel UPS configuration with external bypass cubicle

Check that the manual bypass switch (22) of each UPS in NORMAL position.

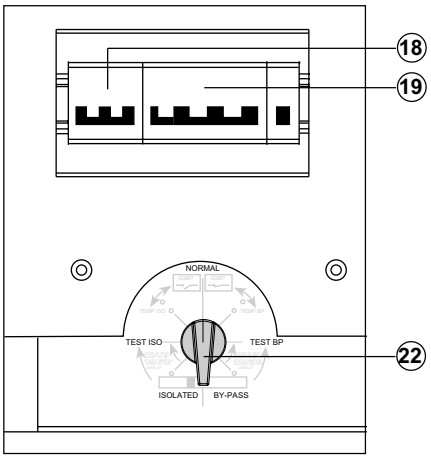

1 - Set switch Q4S in the external bypass cubicle to the ON position.
2 - Wait until all the UPS units are reinitialised.
3 - Check that all the UPS units present in the installation are included in the list on the display and confirm by pressing the function button (32) on each UPS unit.
4 - Wait until the static stitch closes. The control panel should display:

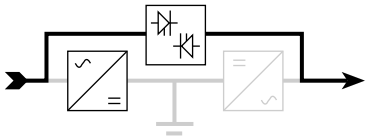

5 - Set switch Q5N in the external bypass cubicle to the ON position.
6 - Set switch Q3BP in the external bypass cubicle to the OFF position.
7 - Set input switch (18) (Q1) in each UPS unit to the ON position.
8 - Set the battery circuit breaker (19) (QF1) in each UPS unit (or the battery circuit breakers in the auxiliary cabinets, if applicable) to the ON position.

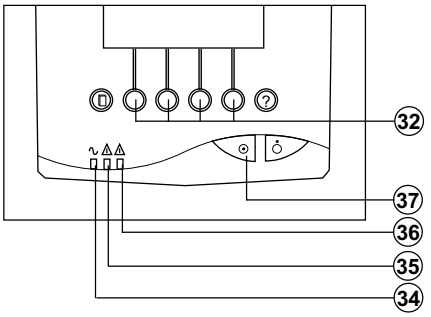

The UPS units start automatically. LED (34) is ON.
The load is protected by the UPS.

If LED (34) remains OFF, press the ON button on each UPS unit (37) (the system is in manual start mode) and, if necessary, confirm by pressing the function button (32) marked ⏎.
If LED (34) still remains OFF and either of LEDs (35) or (36) is ON, a fault has occurred (see section 5.1).

5.5 Training Center

To allow you to use MGE UPS SYSTEMS products effectively and carry out basic maintenance, we offer a complete range of technical training courses in English and French.

50 Hz Training Center:

MGE UPS SYSTEMS
140, Avenue Jean Kuntzmann
Zirst - Montbonnot St Martin
38334 - St Ismier Cedex - FRANCE

Tel: (33) (0)4 76 18 34 14
Fax: (33) (0)4 76 18 45 21
Email: training@mgeups.com
Internet : www.mgepowerlearning.com
On-line catalogue and registration.

60 Hz Training Center:

MGE UPS SYSTEMS
1660, Scenic Avenue
Costa Mesa, CA 92626, USA

Tel: (1) 714 557 1637
Fax: (1) 714 437 9072
Email: paul-pierre.marchand@mgeups.com
Internet: www.mgepowerlearning.com
On-line catalogue and registration.

6. Environment

This product has been designed to respect the environment

It does not contain CFCs or HCFCs.
It was manufactured in a factory certified ISO 14001 respecting eco-design rules.

UPS recycling at the end of service life

MGE UPS SYSTEMS undertakes to recycle, by certified companies and in compliance with all applicable regulations, all UPS products recovered at the end of their service life (contact your branch office).

Packing

UPS packing materials must be recycled in compliance with all applicable regulations.

Warning

This product contains lead-acid batteries. Lead is a dangerous substance for the environment if it is not correctly recycled by specialised companies.
The cooling liquid (propylene glycol base) used for this product is environment-friendly.
The cooling liquid or any residue should not be dumped in sewage systems or outdoors. Suitable recipients must be used to dispose of the liquid in compliance with applicable regulations.

For further information, consult: www.mgeups.com

7.1 Technical sheets

Electrical characteristics

Selection of protection devices

UPS unit with common Normal and Bypass AC inputs

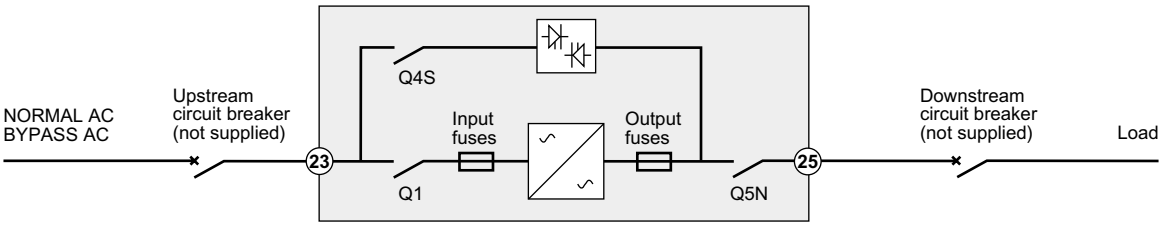

UPS unit with separate Normal and Bypass AC inputs

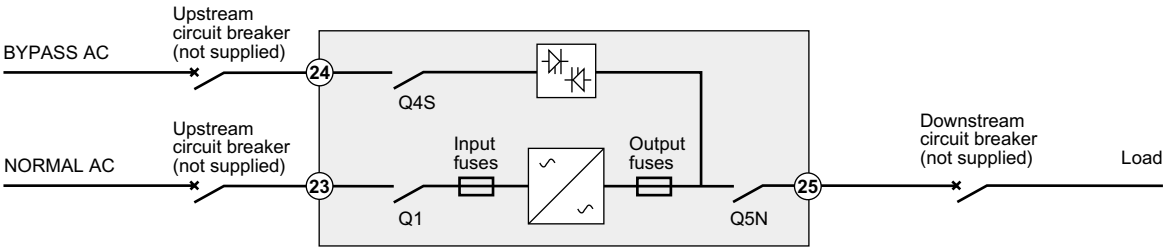

When sizing the upstream circuit breakers, the parameters presented below must be taken into account.

Time/current curves for UPS input and output fuses

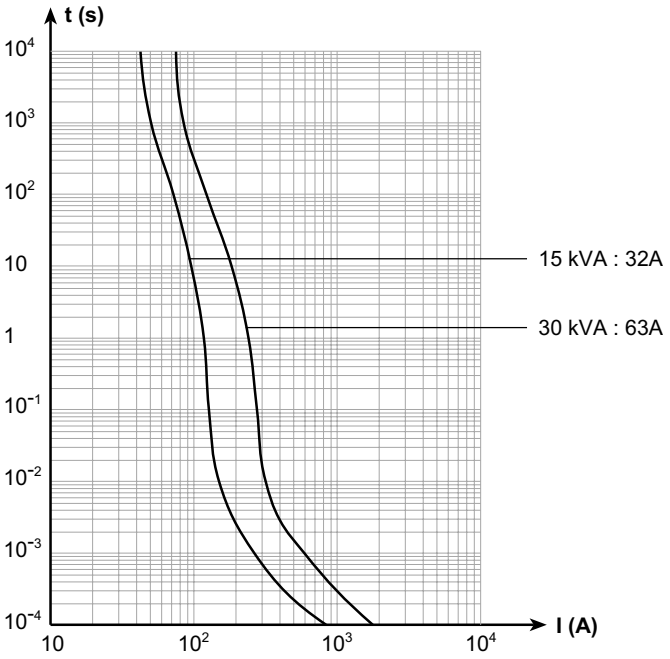

Line current values

UPS power rating	Continuous input current at U = 361 V and overload = 1.05 In	Continuous input current at overload = 1.25 In limited to 10 minutes	Continuous input current at overload = 1.5 In limited to 1 minute	Input/output fuse ratings
10 kVA	22 A	23 A	23 A	32 A
15 kVA	31 A	33 A	33 A	32 A
20 kVA	42 A	46 A	46 A	63 A
30 kVA	60 A	67 A	67 A	63 A

7. Appendices

Earth-leakage current = 1 A

Input / output characteristics

Normal AC source

	Standard UPS	UPS with backfeed protection
Ue	250 to 440 V	335 to 440 V
Fe	45 to 65 Hz	45 to 65 Hz

Bypass AC source

Ue	380 V	400 V	415 V	+ 10% - 8%
Fe	50 Hz - 60 Hz			± 8%

Load output

Us	380 V	400 V	415 V	+ 5% - 0%

Power supplied as a function of input voltage

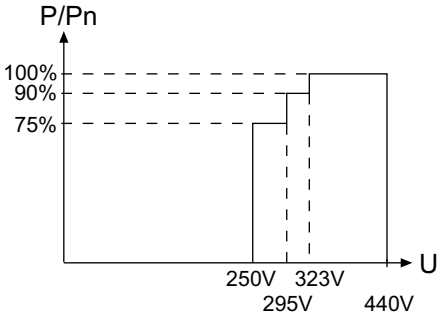

Permissible UPS overloads as a function of time

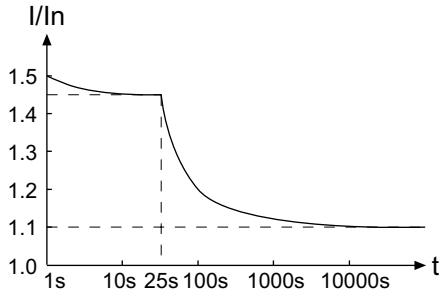

Derating in 400 V 50 Hz UPS installations with a power factor other than 0.8

Load DPF	Derating of a 10 kVA UPS unit	Derating of a 15 kVA UPS unit	Derating of a 20 kVA UPS unit	Derating of a 30 kVA UPS unit
0.6 lagging	10 kVA	15 kVA	20 kVA	30 kVA
0.7 lagging	10 kVA	15 kVA	20 kVA	30 kVA
0.8 lagging	10 kVA	15 kVA	20 kVA	30 kVA
0.9 lagging	8 kVA	13 kVA	17 kVA	26 kVA
1.0 resistive	8 kVA	12 kVA	16 kVA	24 kVA
0.9 leading	7 kVA	12 kVA	14 kVA	24 kVA
0.8 leading	7 kVA	12 kVA	14 kVA	24 kVA
0.7 leading	6 kVA	11 kVA	13 kVA	23 kVA
0.6 leading	6 kVA	11 kVA	13 kVA	23 kVA

Maximum allowable power for parallel UPS units

Without external bypass cubicle:

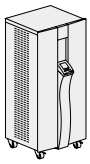

= 1 x Pn

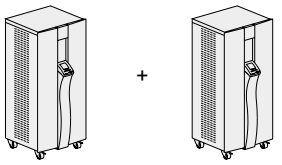

= 1 x Pn

With external bypass cubicle:

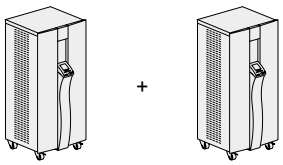

= 2 x Pn

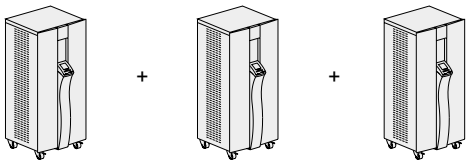

= 3 x Pn

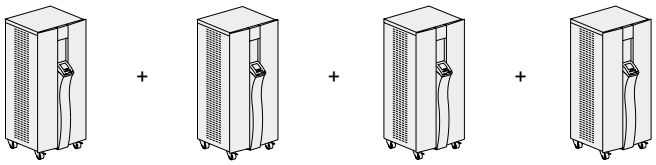

= 3 x Pn

The maximum allowable power for 4 parallel UPS units is limited to 3 x Pn.

Restrictions to parallel operation

	Single UPS	Parallel UPS
EMC Level	Class B	Class A
ECO Mode	Yes	No
Frequency converter	Yes	No
Compatibility with the synchronisation module	No	No
Placing out of service via Solution-Pac / Wan or AS4i (*)	Yes if UPS with technical level >10	No No
System shutdown followed by UPS shutdown if autonomy via MGE UPS SYSTEMS communication products (*)	Yes if UPS with technical level >10	No
Stop / start time programming via a Personal Solution-Pac supervisor or Solution-Pac / Wan (*)	Yes if UPS with technical level >10	

(*) except in ECO mode or Bypass mode.

7. Appendices

Thermal characteristics

- The operating temperature range is 0° C to +35° C (40° C for eight hours), however optimum operation is within the +20° C to +25° C range.
- Battery backup time is adversely affected by high and low temperatures. It is significantly reduced at temperatures under 10° C. Above 25° C, battery service life is cut in half every 10° C. Above 40° C, battery manufacturers no longer guarantee operation due to the risk of thermal runaway.

UPS power rating	Recommended air throughput	Heat loss
10 kVA	400 m^3/h	1100 W
15 kVA	600 m^3/h	1600 W
20 kVA	800 m^3/h	2100 W
30 kVA	1100 m^3/h	3100 W

Air enters through the bottom.
Air exits through the back.

7.2 Glossary

Backup time Time that the connected loads can operate on battery power.

Bypass AC source Source supplying the bypass line. The load can be transferred to the bypass line if an overload occurs on the UPS output, for maintenance or in the event of a malfunction.

ECO mode Operating mode by which the load is supplied directly by the AC source if it is within the tolerances defined by the user. This mode reduces the consumption of electrical power.

External synchronisation port
Input used to synchronise the UPS to an external signal.

Load Devices or systems connected to the UPS output.

Manual bypass Rotary switch controlled by the user, used to connect the loads directly to the AC source. Transfer of the load to the manual bypass enables UPS maintenance without interrupting the supply of power to the connected loads.

Normal (double conversion) mode
The normal UPS operating mode in which the AC source supplies the UPS which in turn supplies the connected loads (after electronic double conversion).

Normal AC source Normal source of power for the UPS.

Relay contacts Contacts supplying information to the user in the form of signals.

UPS (ASI) Uninterruptible Power Supply.

7.3 Index

A

AC input switch 9
Alarms 40, 42

B

Battery 38-40
  Battery circuit breaker 9-10
  External battery 7, 10, 30-32
Buzzer (OFF) 41
Bypass
  Automatic bypass 39-40
  Manual bypass 9, 34, 43-48

C

Casters (locking) 12
Communications cards 9, 11, 27-28
Connections
  Access 8
  Auxiliary cabinets 12, 30-33
  Communications card 11
  Connections panel 9-10
  Control cables 25-28, 32
  Power cables 20-23, 30, 33

D

Dimensions 7
Display 4, 11, 32
Double-conversion mode 37

E

ECO mode 37
Emergency power off 27, 40

F

Faults 40, 42
Frequency 39

H

Heat losses 54

I

Indications
  Audio 4, 37-38, 42
  Visual 4, 11, 41

M

Man-machine interface 11, 41

O

Overloads 51-52

P

Personalisation 39

R

Relay contacts 40
Rotary switch (bypass) 9, 34

S

Shutdown 36-37, 40
Start-up 35-36, 38, 40
Synchronisation
  External synchronisation 9

T

Terminal blocks
  AC-power connections 9, 20-23, 33
  Control connections 9, 25-28, 32
Transformer 33, 39

V

Ventilation 54

W

Weight 7